GUAM MEMORIAL HOSPITAL
URGENT CARE HVAC IMPROVEMENTS
850 GOVERNOR CARLOS CAMACHO ROAD TAMUNING, GUAM

LOCATION MAP
NOT TO SCALE

VICINITY MAP
NOT TO SCALE

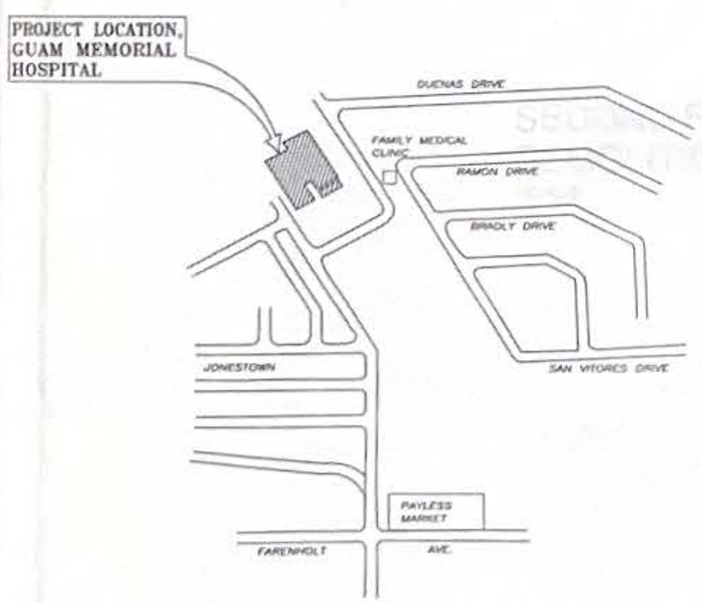

INDEX OF DRAWINGS

SHT. NO.	DWG. NO.	DESCRIPTION
1 of 30	T1.0	TITLE SHEET
		ARCHITECTURAL
2 of 30	D1.1	DEMOLITION REFLECTED CEILING PLAN – PHASE 1
3 of 30	D1.2	DEMOLITION REFELCTED CEILING PLAN – PHASE 2
4 of 30	D1.3	DEMOLITION REFELCTED CEILING PLAN – PHASE 3
5 of 30	A1.1	REFLECTED CEILING PLAN – PHASE 1
6 of 30	A1.2	DETAIL PLANS – PHASE 1, MISC. CEILING & WALL DETAILS
7 of 30	A2.1	REFLECTED CEILING PLAN – PHASE 2
8 of 30	A2.2	DETAIL FLOOR PLAN AND DETAIL REFLECTED CEILING PLAN – PHASE 2, MISC DETAILS
9 of 30	A3.1	REFLECTED CEILING PLAN – PHASE 3
10 of 30	A3.2	DETAIL PLANS & INT. ELEV. – PHASE 3, WINDOW DETAILS, DOOR SCHEDULES, TYPES, & FRAMES
		STRUCTURAL
11 of 30	S0.1	STRUCTURAL NOTES
12 of 30	S2.1	EQUIPMENT SUPPORT & CATWALK PLAN
13 of 30	S3.1	DETAILS
14 of 30	S3.2	DETAILS
		FIRE PROTECTION
15 of 30	FP1.1	URGENT CARE FIRE PROTECTION PHASING PLAN, GENERAL NOTES, SUMMARY OF WORK, LEGEND, SPRINKLER HEAD AT LAY-IN CEILING DETAIL, & SPRINKLER HEAD AT HARD CEILING DETAIL
16 of 30	FP1.2	URGENT CARE FIRE PROTECTION REMOVAL PLAN, URGENT CARE FIRE PROTECTION PLAN – PHASE 1, KEYED NOTES & NOTES
17 of 30	FP1.3	URGENT CARE FIRE PROTECTION REMOVAL PLAN, URGENT CARE FIRE PROTECTION PLAN – PHASE 2 & 3, KEYED NOTES & NOTES
		MECHANICAL
18 of 30	M1.0	LEGEND & EQUIPMENT SCHEDULE
19 of 30	M2.1	URGENT CARE EXISTING A/C & VENTILATION PLAN, AND NOTES
20 of 30	M2.2	URGENT CARE OVERALL PHASING PLAN, CONSTRUCTION NOTES, & BRIEF DESCRIPTION OF MECHANICAL WORK
21 of 30	M2.3	URGENT CARE A/C & VENTILATION REMOVAL PLAN & URGENT CARE A/C & VENTILATION PLAN – PHASE 1, KEYED NOTES & NOTES
22 of 30	M2.4	URGENT CARE A/C & VENTILATION REMOVAL PLAN & URGENT CARE A/C & VENTILATION PLAN – PHASE 2, KEYED NOTES & NOTES
23 of 30	M2.5	URGENT CARE A/C & VENTILATION REMOVAL PLAN & URGENT CARE A/C & VENTILATION PLAN – PHASE 3, KEYED NOTES & NOTES
24 of 30	M3.1	DDC POINTS LIST, SCHEMATIC DIAGRAM, SEQUENCE OF OPERATIONS & NOTES
25 of 30	M4.1	DETAILS
26 of 30	M4.2	DETAILS
		ELECTRICAL
27 of 30	E1.1	LEGEND, NOTES AND PANEL SCHEDULES
28 of 30	E2.1	REFLECTED CEILING PLAN AND POWER PLAN, PHASE 1
29 of 30	E2.2	REFLECTED CEILING PLAN AND POWER PLAN, PHASE 2
30 of 30	E2.3	REFLECTED CEILING PLAN AND POWER PLAN, PHASE 3

GENERAL NOTES

1. ALL WORK SHALL BE IN ACCORDANCE WITH GOVERNMENT LAWS, ORDINANCES, RULES & REGULATIONS. MECHANICAL WORK SHALL CONFORM WITH THE 2009 EDITION OF THE INTERNATIONAL MECHANICAL CODE, INTERNATIONAL BUILDING CODE, AND GUAM TROPICAL ENERGY CODE 2017.
2. VERIFY ALL DIMENSIONS SHOWN ON THE DRAWINGS BEFORE COMMENCING WORK. ANY DISCREPANCIES SHALL BE BROUGHT TO THE ATTENTION OF THE CONTRACTING OFFICER.
3. DO NOT SCALE DRAWING EXCEPT FOR MATERIAL TAKE-OFFS. IF ADDITIONAL DIMENSIONS ARE REQUIRED OR THERE IS SOME DOUBT AS TO THE LOCATION OF A PARTICULAR ITEM, CONTACT THE CONTRACTING OFFICER.
4. COORDINATE SEQUENCE OF WORK AND VERIFY SITE ACCESS FOR EQUIPMENT WITH CONTRACTING OFFICER.
5. ANY DAMAGE TO EXISTING SURFACES OR FINISHES, CAUSED BY WORK IN ADJACENT AREAS MUST BE RESTORED BY CONTRACTOR.
6. VISIT SITE AND BECOME FAMILIAR WITH CONDITIONS AFFECTING WORK. NO ADDITIONAL ALLOWANCES WILL BE GRANTED BECAUSE OF LACK OF SUCH INFORMATION EXCEPT THAT RESULTING FROM LATENT CONDITIONS.
7. OBTAIN ALL NECESSARY PERMITS, ARRANGE FOR INSPECTIONS, PROVIDE TESTS AND PAY FEES REQUIRED BY GOVERNING AGENCIES HAVING JURISDICTION OVER THIS WORK.
8. LOCATION OF EQUIPMENT, ETC., ARE APPROXIMATE. VERIFY EXACT LOCATION.
9. ALL WORK SHALL BE GUARANTEED FOR ONE YEAR FOLLOWING ACCEPTANCE AGAINST DEFECTS IN MATERIALS AND WORKMANSHIP.
10. COORDINATE THE REMOVAL OF EQUIPMENT FROM THE AFFECTED SPACE WITH GMH FACILITIES MAINTENANCE DEPARTMENT. DISPOSE REMOVED MATERIALS AND EQUIPMENT THAT WILL NOT BE RE-USED.
11. ITEMS THAT ARE DAMAGED BY THE CONTRACTOR DURING REMOVAL AND RELOCATION MUST BE REPLACED BY THE CONTRACTOR AT NO EXTRA COST TO THE OWNER.

ARCHITECTURAL

TRMA
Taniguchi Ruth Makio Architects
100 Cliff Business Center, P.O. Box EA, Agana, GU 96910
Tel.: (671) 475-8772 • Fax.: (671) 472-3381
Architecture
Planning
Interior Design

MICHAEL W. MAKIO CERTIFICATE No. 246 EXP. 4/30/25 REGISTERED ARCHITECT GUAM

HEREBY CERTIFY THAT THIS PLAN WAS PREPARED BY ME OR UNDER MY DIRECT SUPERVISION
DATE: 10-21-24

CIVIL/STRUCTURAL

N.C. MACARIO & ASSOCIATES, INC.
P.O. Box 754 Agana, Guam 96910
Tel. 646-0947/48 Fax: 646-0901
Email: ncma@guam.net

NICANDRO C. MACARIO CERTIFICATE No. 542 GUAM PROFESSIONAL ENGINEER

I HEREBY CERTIFY THAT THIS PLAN WAS PREPARED BY ME OR UNDER MY DIRECT SUPERVISION
DATE: 10/21/2024

FIRE PROTECTION/MECHANICAL

RMT ENGINEERS, LLC
MECHANICAL AND FIRE PROTECTION
ENGINEERING SERVICES
CONSTRUCTION MANAGEMENT SERVICES
P.O.BOX 6853, TAMUNING, GUAM 96931
TEL. (671) 969 – 0768
Email: admin@rmtengineers.com

RAMIL M. TIO CERTIFICATE 20-1118 (FIRE PROTECTION) EXP. 04/30/25 GUAM PROFESSIONAL ENGINEER

I HEREBY CERTIFY THAT THIS PLAN WAS PREPARED BY ME OR UNDER MY DIRECT SUPERVISION
DATE: 10-22-2024

RAMIL M. TIO CERTIFICATE 20-1001 (MECHANICAL) EXP. 04/30/25 GUAM PROFESSIONAL ENGINEER

I HEREBY CERTIFY THAT THIS PLAN WAS PREPARED BY ME OR UNDER MY DIRECT SUPERVISION
DATE: 10-22-2024

ELECTRICAL

WA
WIXON & ASSOCIATES
CONSULTING ENGINEERING

ALFRED M. TIO No. 5819 (ELECTRICAL) GUAM PROFESSIONAL ENGINEER

I HEREBY CERTIFY THAT THIS PLAN WAS PREPARED BY ME OR UNDER MY DIRECT SUPERVISION
DATE: 10-21-2024

REVISIONS

No.	Description	Date

RMT ENGINEERS, LLC
MECHANICAL AND FIRE PROTECTION
ENGINEERING SERVICES
CONSTRUCTION MANAGEMENT SERVICES
P.O.BOX 6853, TAMUNING, GUAM 96931
TEL. (671) 969 – 0768
Email: admin@rmtengineers.com

RAMIL M. TIO CERTIFICATE 20-1001 (MECHANICAL) EXP. 04/30/25 GUAM PROFESSIONAL ENGINEER

I HEREBY CERTIFY THAT THIS PLAN WAS PREPARED BY ME OR UNDER MY DIRECT SUPERVISION
DATE: _____

Project:
GMH URGENT CARE HVAC IMPROVEMENTS
GUAM MEMORIAL HOSPITAL TAMUNING, GUAM

Title:
LOCATION MAP, VICINITY MAP, INDEX OF DRAWINGS & GENERAL NOTES

FINAL SUBMITTAL

Designed:	RMT
Drawn:	AI
Checked:	RMT
Supv:	RMT
Scale:	AS SHOWN
Date:	10/25/2024
Project No. 61K2112	AutoCAD File GMH URGENT CARE

Drawing No.
T1.0

Sheet No. 1 of 30

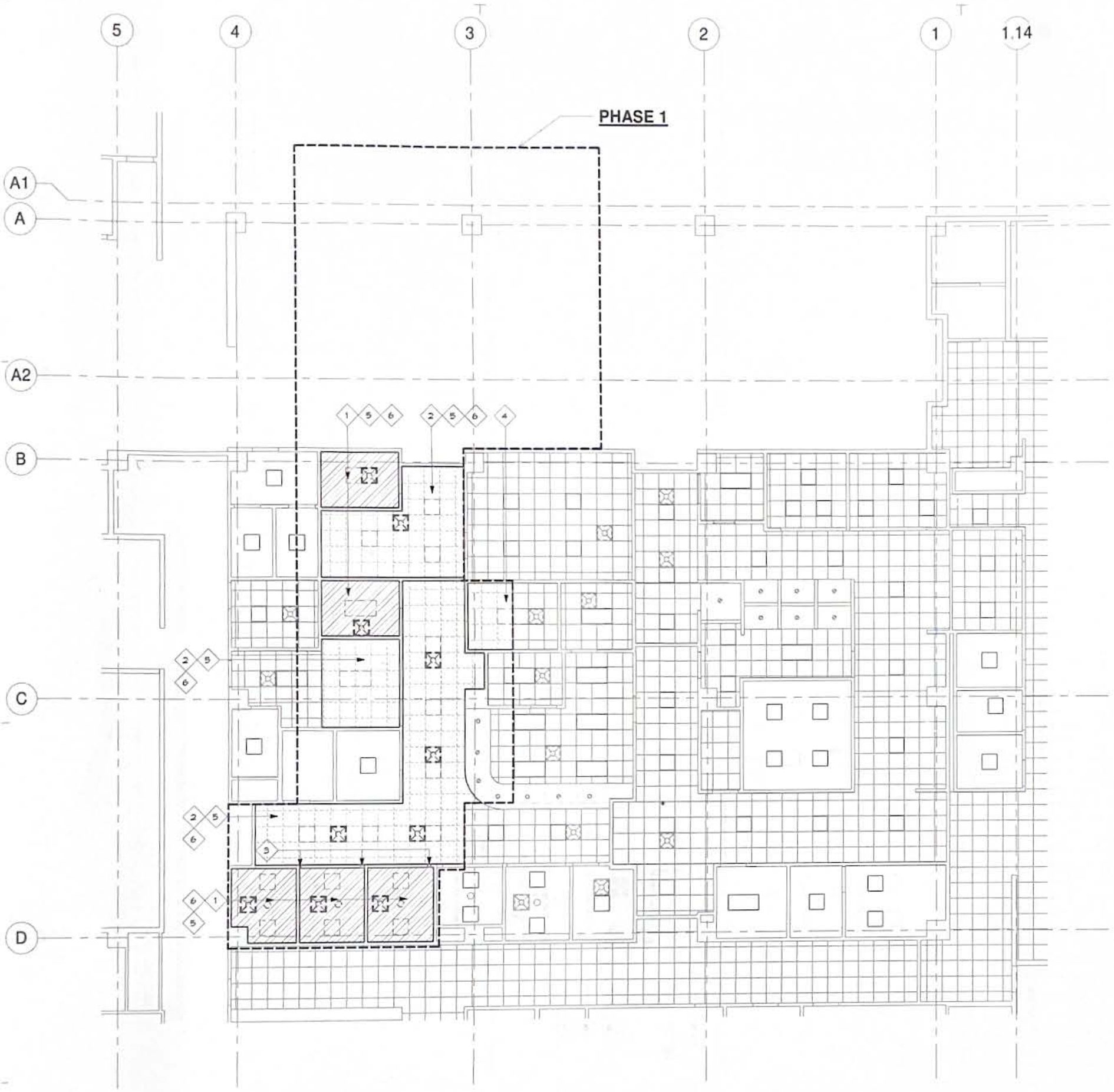

1 SECOND FLOOR - URGENT CARE DEMOLITION RCP - PHASE 1

SCALE: 1/8" = 1'-0"

DEMOLITION KEYNOTES

1. REMOVE AND DISPOSE EXIST. GYP. BD. CLG. SYSTEM.
2. REMOVE AND DISPOSE EXIST. ACT CLG. SYSTEM.
3. DEMOLISH EXIST. PORTION OF GYP. BD. WALL. PREP ROUGH OPENING TO RECEIVE NEW DOOR SYSTEMS.
4. PATCH AND REPAIR CEILING TO MATCH THE EXISTING.
5. REMOVE AND STORE ELECTRICAL FIXTURES FOR RE-INSTALLATION (SEE ELECTRICAL).
6. REMOVE AND STORE MECHANICAL FIXTURES FOR RE-INSTALLATION (SEE MECHANICAL).

GENERAL NOTES

1. ALL WORK SHALL BE IN COMPLIANCE WITH APPLICABLE FEDERAL AND LOCAL CODES AND REGULATIONS PERTAINING TO LIFE SAFETY PROPERTY PROTECTION, AND ENVIRONMENTAL PROTECTION.
2. PROVIDE AND MAINTAIN HOARDING/BARRICADES, AND LIGHTING AS REQUIRED BY APPLICABLE CODES AND REGULATIONS TO PROTECT OCCUPANTS OF BUILDINGS AND WORKERS.
3. KEEP EXITS, EXIT ACCESSES, EXIT DISCHARGES, AND PUBLIC WAYS CLEAR AT ALL TIMES.
4. VERIFY LOCATION AND EXTENT OF DEMOLITION WORK FOR ALL TRADES NECESSARY FOR THE WORK WHETHER INDICATED OR NOT.
5. PROVIDE AND MAINTAIN BARRIERS AS REQUIRED TO PREVENT SPREAD OF DUST, FUMES, SMOKE, ETC. TO OTHER PARTS OF THE BUILDING. UPON COMPLETION, REMOVE PARTITIONS AND REPAIR DAMAGED SURFACES TO MATCH ADJACENT SURFACES.
6. PROTECT ADJACENT AREAS AND EXISTING BUILDING ELEMENTS / COMPONENTS TO REMAIN FROM POTENTIAL DAMAGES RESULTING FROM DEMOLITION WORK.
7. REPAIR DAMAGES TO ADJACENT SURFACES, ETC. WHERE AFFECTED BY DEMOLITION WORK.
8. IF DEMOLITION IS PERFORMED BEYOND THAT IS REQUIRED, RESTORE AFFECTED AREAS AT NO COST TO THE OWNER.
9. NOTIFY OWNER BEFORE DEMOLITION WORK BEGINS IN OCCUPIED AREAS.
10. KEEP AREAS CLEAN AND HAZARD-FREE THROUGHOUT DURATION OF DEMOLITION WORK. LEAVE AREAS CLEAN AND READY FOR NEW WORK.
11. REMOVE AND LEGALLY DISPOSE OF DEBRIS, RUBBISH, AND OTHER MATERIALS RESULTING FROM DEMOLITION WORK DAILY.
12. NO EXISTING WORK BY OWNER SHALL BE REMOVED UNLESS SUCH REMOVAL IS APPROVED IN WRITING BY OWNER.
13. NOTIFY OWNER OF UTILITIES, PIPES, CONDUIT, AND OTHER ELEMENTS FOUND WITHIN DEMOLITION AREA THAT ARE NOT SHOWN ON THE DRAWINGS.

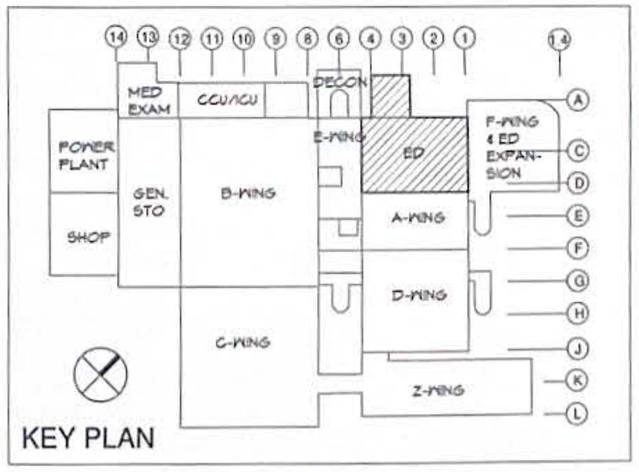

KEY PLAN

0 4' 8' 16'

REVISIONS		
No	Description	Date

RMT ENGINEERS, LLC
MECHANICAL AND FIRE PROTECTION ENGINEERING SERVICES
CONSTRUCTION MANAGEMENT SERVICES
P.O.BOX 6853, TAMUNING, GUAM 96931
TEL. (671) 969 - 0768
Email: admin@rmtengineers.com

MICHAEL W. MANGLONA CERTIFICATE NO. 4/30/25 GUAM REGISTERED ARCHITECT

I HEREBY CERTIFY THAT THIS PLAN WAS PREPARED BY ME OR UNDER MY DIRECT SUPERVISION

DATE

TRMA
Taniguchi Ruth Makio Architects
100 Cliff Business Center, P.O. Box EA, Agana, GU 96910
Tel.: (671) 475-8772 • Fax.: (671) 472-3381
Architecture
Planning
Interior Design

Project

GMH URGENT CARE HVAC IMPROVEMENTS

GUAM MEMORIAL HOSPITAL
TAMUNING, GUAM

Title

DEMOLITION REFLECTED CEILING PLAN - PHASE 1

FINAL SUBMITTAL

Designed:	TRMA
Drawn:	RP
Checked:	NQ
Supv:	MWM/MGS
Scale:	1/8" = 1'-0"
Date:	10/11/2024
Project No.	AutoCAD File

Drawing No.

D1.1

Sheet No. 2 of 30

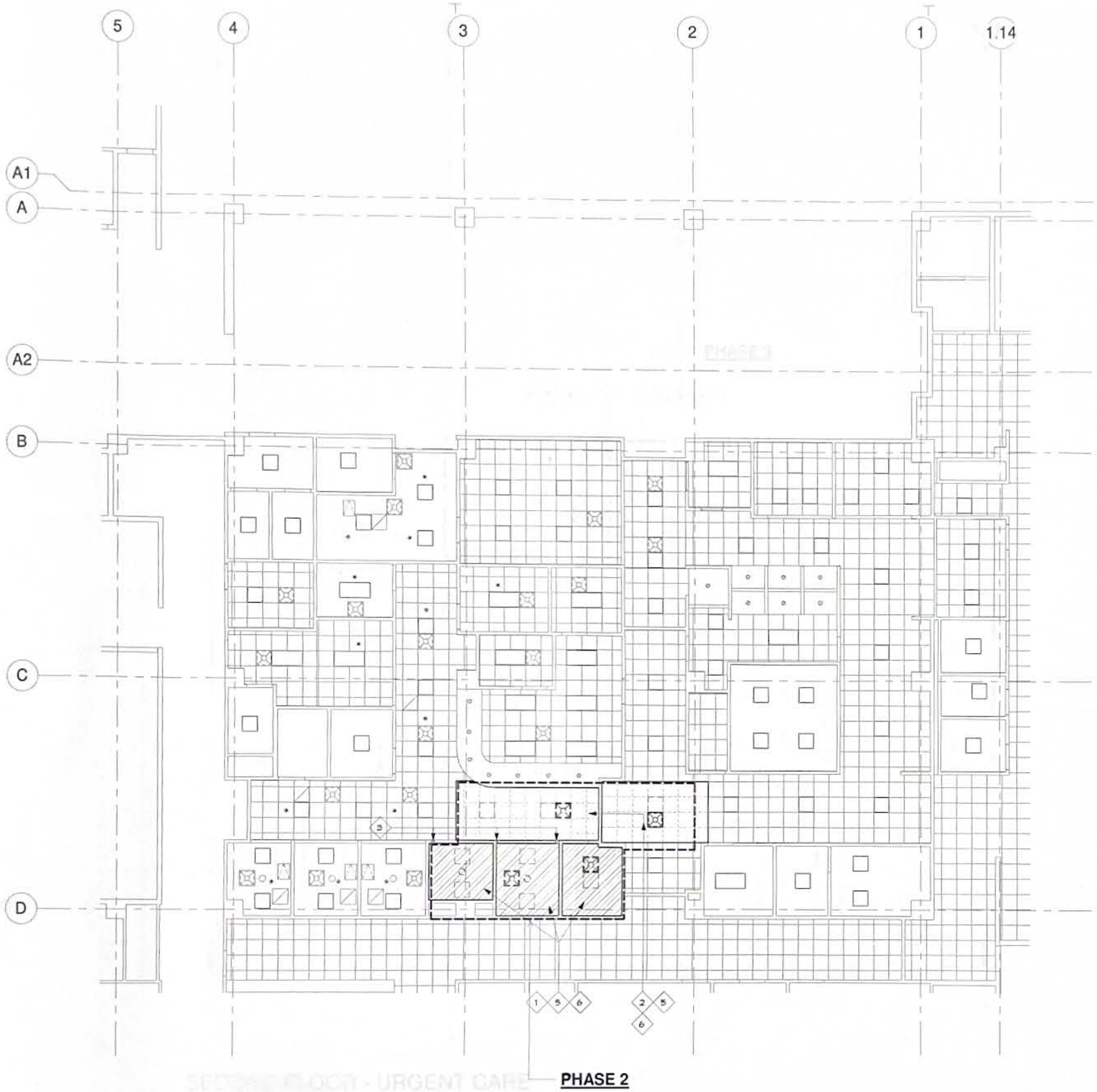

1 SECOND FLOOR - URGENT CARE
DEMOLITION RCP - PHASE 2
SCALE: 1/8" = 1'-0"

DEMOLITION KEYNOTES

1. REMOVE AND DISPOSE EXIST. GYP. BD. CLG. SYSTEM.
2. REMOVE AND DISPOSE EXIST. ACT CLG. SYSTEM.
3. DEMOLISH EXIST. PORTION OF GYP. BD. WALL. PREP ROUGH OPENING TO RECEIVE NEW DOOR SYSTEMS.
4. PATCH AND REPAIR CEILING TO MATCH THE EXISTING.
5. REMOVE AND STORE ELECTRICAL FIXTURES FOR RE-INSTALLATION (SEE ELECTRICAL).
6. REMOVE AND STORE MECHANICAL FIXTURES FOR RE-INSTALLATION (SEE MECHANICAL).

GENERAL NOTES

1. ALL WORK SHALL BE IN COMPLIANCE WITH APPLICABLE FEDERAL AND LOCAL CODES AND REGULATIONS PERTAINING TO LIFE SAFETY PROPERTY PROTECTION, AND ENVIRONMENTAL PROTECTION.
2. PROVIDE AND MAINTAIN HOARDING/BARRICADES, AND LIGHTING AS REQUIRED BY APPLICABLE CODES AND REGULATIONS TO PROTECT OCCUPANTS OF BUILDINGS AND WORKERS.
3. KEEP EXITS, EXIT ACCESSES, EXIT DISCHARGES, AND PUBLIC WAYS CLEAR AT ALL TIMES.
4. VERIFY LOCATION AND EXTENT OF DEMOLITION WORK FOR ALL TRADES NECESSARY FOR THE WORK WHETHER INDICATED OR NOT.
5. PROVIDE AND MAINTAIN BARRIERS AS REQUIRED TO PREVENT SPREAD OF DUST, FUMES, SMOKE, ETC. TO OTHER PARTS OF THE BUILDING UPON COMPLETION. REMOVE PARTITIONS AND REPAIR DAMAGED SURFACES TO MATCH ADJACENT SURFACES.
6. PROTECT ADJACENT AREAS AND EXISTING BUILDING ELEMENTS / COMPONENTS TO REMAIN FROM POTENTIAL DAMAGES RESULTING FROM DEMOLITION WORK.
7. REPAIR DAMAGES TO ADJACENT SURFACES, ETC. WHERE AFFECTED BY DEMOLITION WORK.
8. IF DEMOLITION IS PERFORMED BEYOND THAT IS REQUIRED RESTORE AFFECTED AREAS AT NO COST TO THE OWNER.
9. NOTIFY OWNER BEFORE DEMOLITION WORK BEGINS IN OCCUPIED AREAS.
10. KEEP AREAS CLEAN AND HAZARD-FREE THROUGHOUT DURATION OF DEMOLITION WORK. LEAVE AREAS CLEAN AND READY FOR NEW WORK.
11. REMOVE AND LEGALLY DISPOSE OF DEBRIS, RUBBISH, AND OTHER MATERIALS RESULTING FROM DEMOLITION WORK DAILY.
12. NO EXISTING WORK BY OWNER SHALL BE REMOVED UNLESS SUCH REMOVAL IS APPROVED IN WRITING BY OWNER.
13. NOTIFY OWNER OF UTILITIES, PIPES, CONDUIT, AND OTHER ELEMENTS FOUND WITHIN DEMOLITION AREA THAT ARE NOT SHOWN ON THE DRAWINGS.

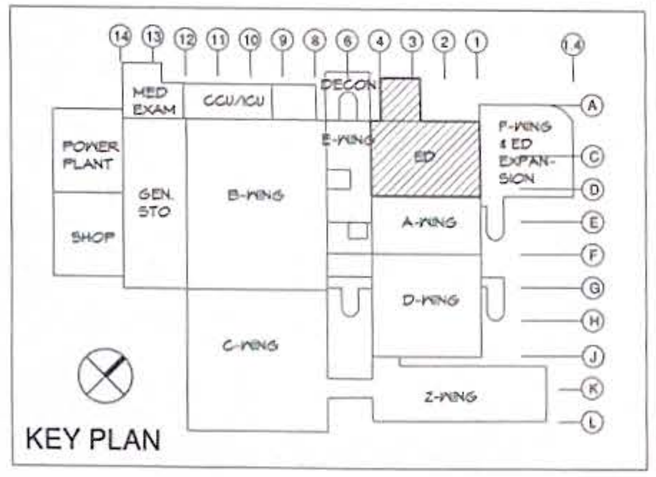

KEY PLAN

0 4' 8' 16'

REVISIONS		
No.	Description	Date

RMT ENGINEERS, LLC
MECHANICAL AND FIRE PROTECTION ENGINEERING SERVICES
CONSTRUCTION MANAGEMENT SERVICES
P.O.BOX 6853, TAMUNING, GUAM 96931
TEL: (671) 969 - 0768
Email: admin@rmtengineers.com

MICHAEL W. MAGO CERTIFICATE NO. 2070 GUAM REGISTERED ARCHITECT

I HEREBY CERTIFY THAT THIS PLAN WAS PREPARED BY ME OR UNDER MY DIRECT SUPERVISION

DATE: _____

TRMA
Taniguchi Ruth Makio Architects
100 Cliff Business Center, P.O. Box EA, Agana, GU 96910
Tel.: (671) 475-8772 • Fax.: (671) 472-3381
Architecture
Planning
Interior Design

Project:
GMH URGENT CARE
HVAC IMPROVEMENTS
GUAM MEMORIAL HOSPITAL
TAMUNING, GUAM

Title:
DEMOLITION
REFLECTED CEILING
PLAN - PHASE 2

FINAL SUBMITTAL

Designed:	TRMA
Drawn:	RP
Checked:	NQ
Supv:	MWM/MGS
Scale:	1/8" = 1'-0"
Date:	10/11/2024
Project No.	AutoCAD File

Drawing No.
D1.2

Sheet No. 3 of 30

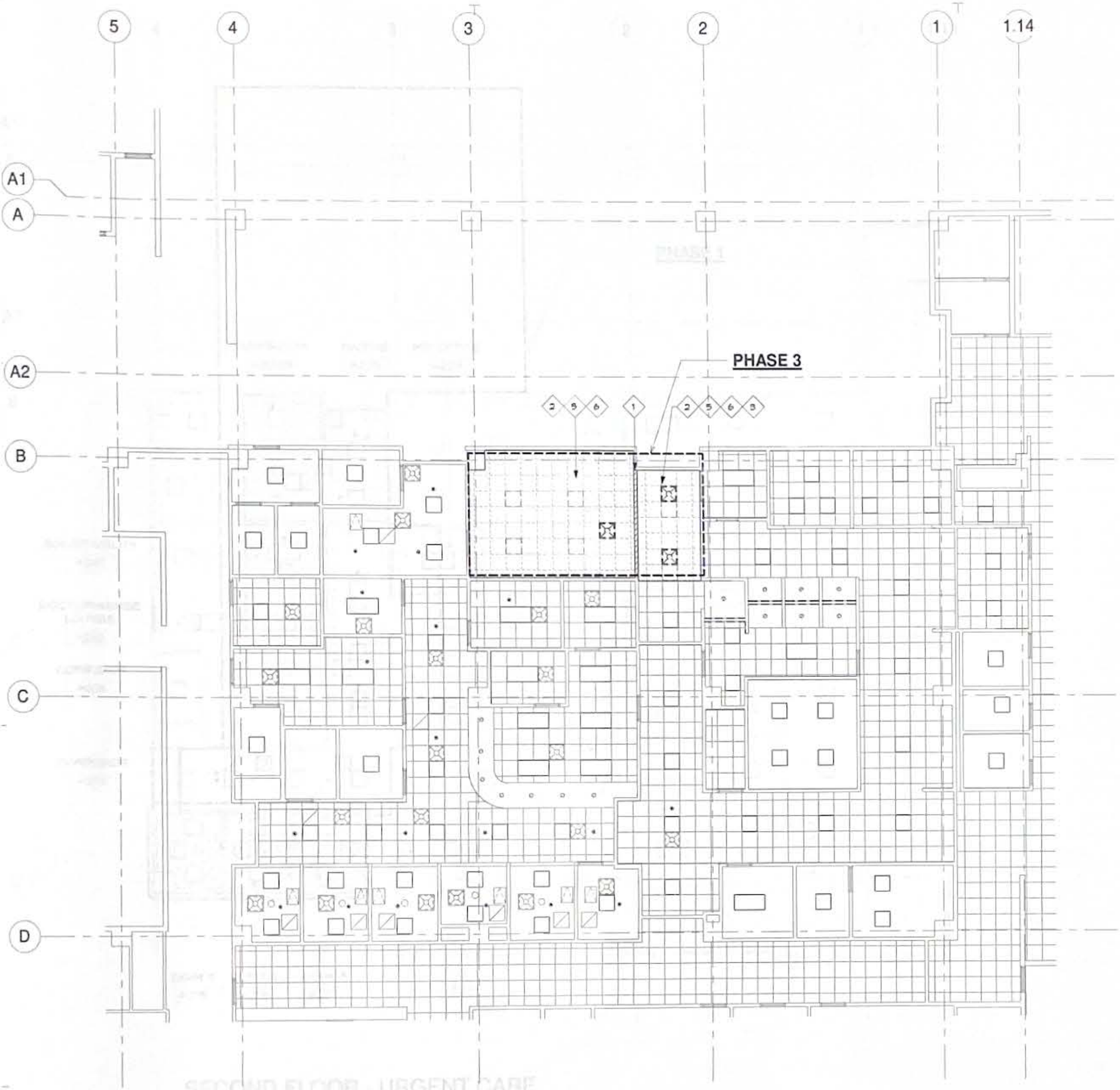

1 SECOND FLOOR - URGENT CARE DEMOLITION RCP - PHASE 3

SCALE: 1/8" = 1'-0"

DEMOLITION KEYNOTES

1. REMOVE AND DISPOSE EXIST. GYP. BD. CLG. SYSTEM.
2. REMOVE AND DISPOSE EXIST. ACT CLG. SYSTEM.
3. DEMOLISH EXIST. PORTION OF GYP. BD. WALL. PREP ROUGH OPENING TO RECEIVE NEW DOOR SYSTEMS.
4. PATCH AND REPAIR CEILING TO MATCH THE EXISTING.
5. REMOVE AND STORE ELECTRICAL FIXTURES FOR RE-INSTALLATION (SEE ELECTRICAL).
6. REMOVE AND STORE MECHANICAL FIXTURES FOR RE-INSTALLATION (SEE MECHANICAL).

GENERAL NOTES

1. ALL WORK SHALL BE IN COMPLIANCE WITH APPLICABLE FEDERAL AND LOCAL CODES AND REGULATIONS PERTAINING TO LIFE SAFETY, PROPERTY PROTECTION, AND ENVIRONMENTAL PROTECTION.
2. PROVIDE AND MAINTAIN HOARDING/BARRICADES, AND LIGHTING AS REQUIRED BY APPLICABLE CODES AND REGULATIONS TO PROTECT OCCUPANTS OF BUILDINGS AND WORKERS.
3. KEEP EXITS, EXIT ACCESSES, EXIT DISCHARGES, AND PUBLIC WAYS CLEAR AT ALL TIMES.
4. VERIFY LOCATION AND EXTENT OF DEMOLITION WORK FOR ALL TRADES NECESSARY FOR THE WORK WHETHER INDICATED OR NOT.
5. PROVIDE AND MAINTAIN BARRIERS AS REQUIRED TO PREVENT SPREAD OF DUST, FUMES, SMOKE, ETC. TO OTHER PARTS OF THE BUILDING. UPON COMPLETION, REMOVE PARTITIONS AND REPAIR DAMAGED SURFACES TO MATCH ADJACENT SURFACES.
6. PROTECT ADJACENT AREAS AND EXISTING BUILDING ELEMENTS / COMPONENTS TO REMAIN FROM POTENTIAL DAMAGES RESULTING FROM DEMOLITION WORK.
7. REPAIR DAMAGES TO ADJACENT SURFACES, ETC. WHERE AFFECTED BY DEMOLITION WORK.
8. IF DEMOLITION IS PERFORMED BEYOND THAT IS REQUIRED RESTORE AFFECTED AREAS AT NO COST TO THE OWNER.
9. NOTIFY OWNER BEFORE DEMOLITION WORK BEGINS IN OCCUPIED AREAS.
10. KEEP AREAS CLEAN AND HAZARD-FREE THROUGHOUT DURATION OF DEMOLITION WORK. LEAVE AREAS CLEAN AND READY FOR NEW WORK.
11. REMOVE AND LEGALLY DISPOSE OF DEBRIS, RUBBISH, AND OTHER MATERIALS RESULTING FROM DEMOLITION WORK DAILY.
12. NO EXISTING WORK BY OWNER SHALL BE REMOVED UNLESS SUCH REMOVAL IS APPROVED IN WRITING BY OWNER.
13. NOTIFY OWNER OF UTILITIES, PIPES, CONDUIT, AND OTHER ELEMENTS FOUND WITHIN DEMOLITION AREA THAT ARE NOT SHOWN ON THE DRAWINGS.

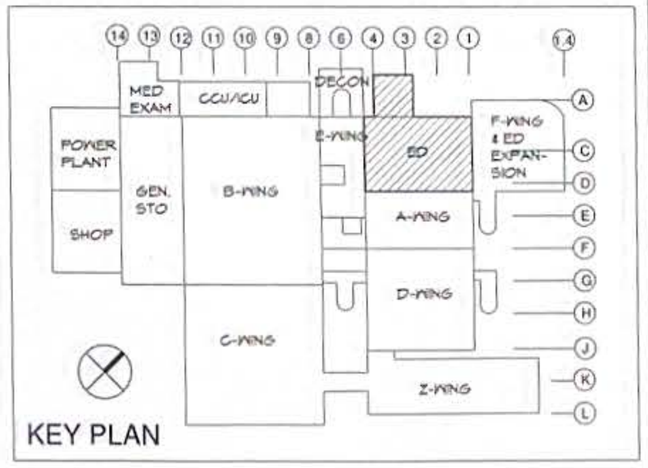

KEY PLAN

0 4' 8' 16'

REVISIONS		
No	Description	Date

RMT ENGINEERS, LLC
MECHANICAL AND FIRE PROTECTION ENGINEERING SERVICES
CONSTRUCTION MANAGEMENT SERVICES
P.O.BOX 6853, TAMUNING, GUAM 96931
TEL: (671) 969 - 0788
Email: admin@rmtengineers.com

MICHAEL W. MAGO CERTIFICATE No. 25 GUAM REGISTERED ARCHITECT

I HEREBY CERTIFY THAT THIS PLAN WAS PREPARED BY ME OR UNDER MY DIRECT SUPERVISION.

DATE _____

TRMA
Taniguchi Ruth Makio Architects
100 Cliff Business Center, P.O. Box EA, Agana, GU 96910
Tel.: (671) 475-8772 • Fax.: (671) 472-3381
Architecture
Planning
Interior Design

Project

GMH URGENT CARE HVAC IMPROVEMENTS

GUAM MEMORIAL HOSPITAL
TAMUNING, GUAM

Title:

DEMOLITION REFLECTED CEILING PLAN - PHASE 3

FINAL SUBMITTAL

Designed:	TRMA
Drawn:	RP
Checked:	NQ
Supv:	MWM/MGS
Scale:	1/8" = 1'-0"
Date:	10/11/2024
Project No.	AutoCAD File

Drawing No.

D1.3

Sheet No. 4 of 30

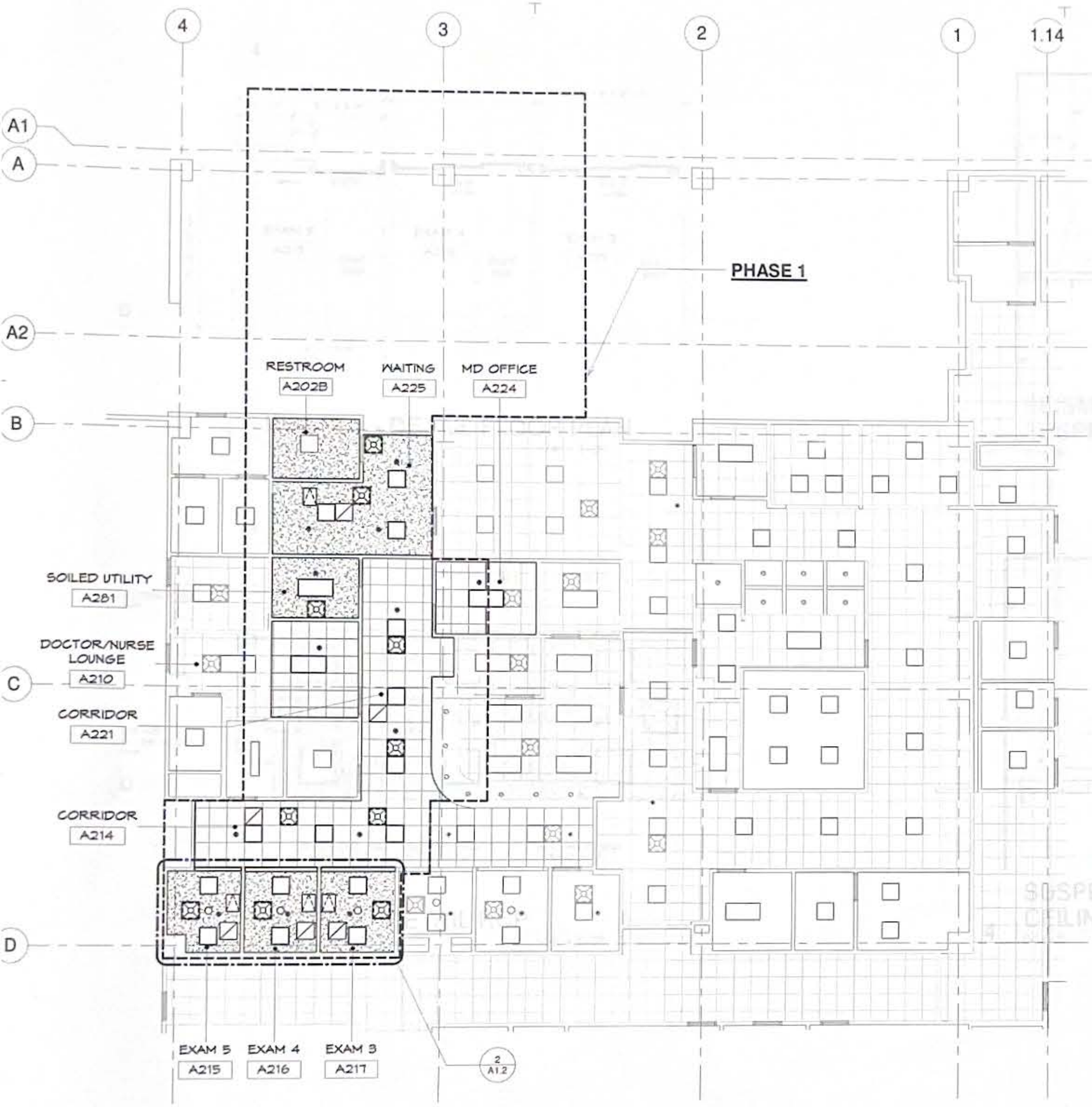

1 SECOND FLOOR - URGENT CARE RCP - PHASE 1

SCALE: 1/8" = 1'-0"

CEILING LEGEND

- NEW GYPSUM BD CLG. PAINT FINISH
- EXISTING GYPSUM BD CLG
- 24" X 18" ACCESS PANEL
- NEW 2' X 2' ACOUSTICAL TILES
- EXISTING 2' X 2' ACOUSTICAL TILES
- SPRINKLER
- SMOKE DETECTOR
- P.A SPEAKER
- EXIT SIGN
- CLOCK
- NURSE
- AHU ELEC. CONNECTION
- RECESSED DOWNLIGHT
- SURFACE MOUNTED LIGHTS
- 2X2 LIGHT FIXTURE
- SUPPLY DIFFUSER
- EXHAUST AIR FILTER MODULE

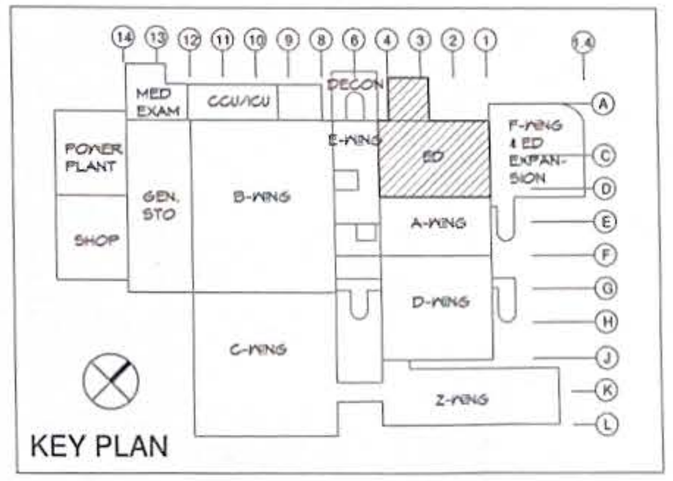

KEY PLAN

0 4' 8' 16'

REVISIONS		
No.	Description	Date

RMT ENGINEERS, LLC
MECHANICAL AND FIRE PROTECTION ENGINEERING SERVICES
CONSTRUCTION MANAGEMENT SERVICES
P.O.BOX 6853, TAMUNING, GUAM 96931
TEL: (671) 969 - 0768
Email: admin@rmtengineers.com

MICHAEL W. MAKIO CERTIFICATE NO. 9 GUAM REGISTERED ARCHITECT

I HEREBY CERTIFY THAT THIS PLAN WAS PREPARED BY ME OR UNDER MY DIRECT SUPERVISION

DATE

TRMA
Taniguchi Ruth Makio Architects
100 Cliff Business Center, P.O. Box EA, Agana, GU 96910
Tel.: (671) 475-8772 • Fax.: (671) 472-3381
Architecture
Planning
Interior Design

Project:

GMH URGENT CARE HVAC IMPROVEMENTS

GUAM MEMORIAL HOSPITAL
TAMUNING, GUAM

Title:

REFLECTED CEILING PLAN - PHASE 1

FINAL SUBMITTAL

Designed:	TRMA
Drawn:	RP
Checked:	NQ
Supv:	MWM/MGS
Scale:	1/8" = 1'-0"
Date:	10/11/2024
Project No.	AutoCAD File

Drawing No.

A1.1

Sheet No. 5 of 30

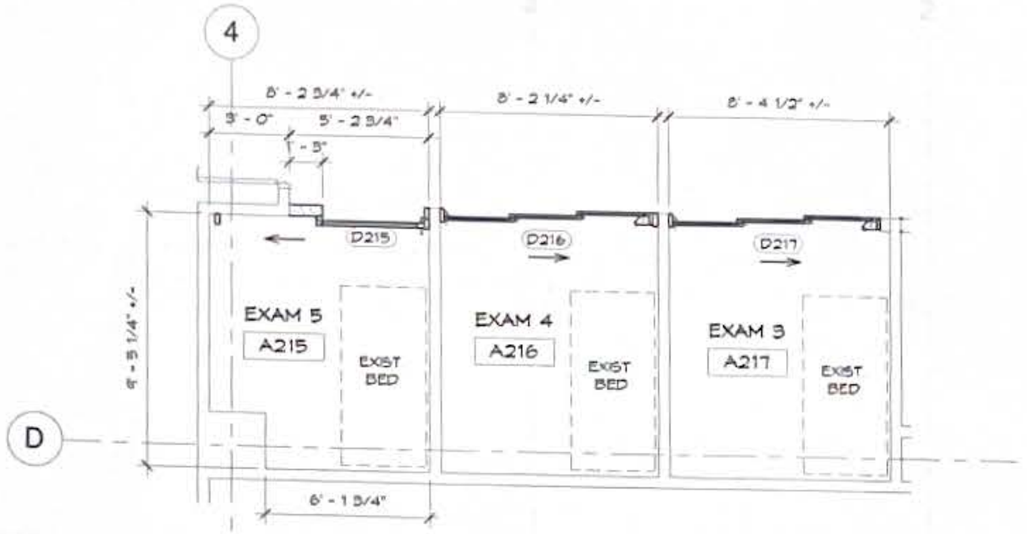

1 PHASE 1 - DETAIL FLOOR PLAN
SCALE: 1/4" = 1'-0"

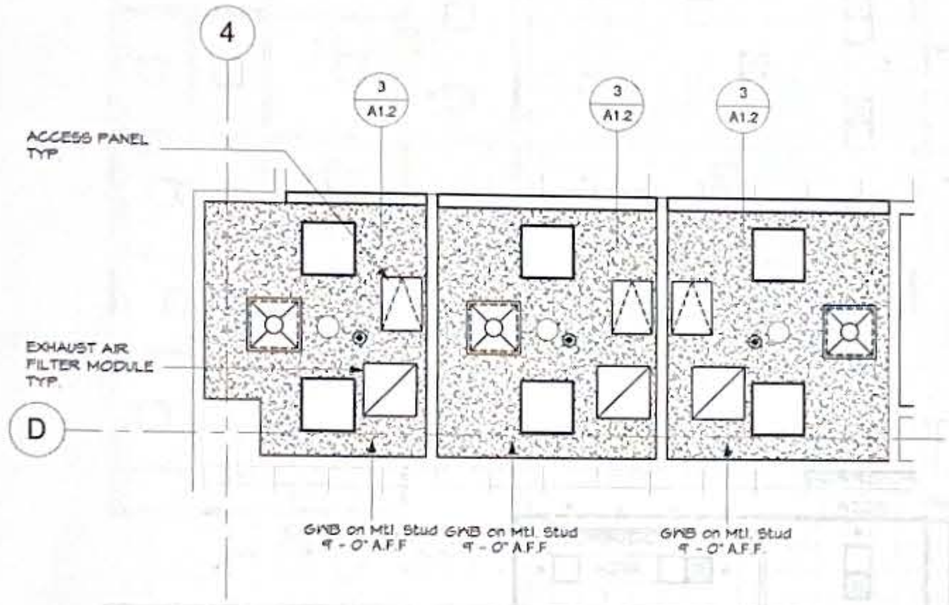

2 PHASE 2 - DETAIL RCP
SCALE: 1/4" = 1'-0"

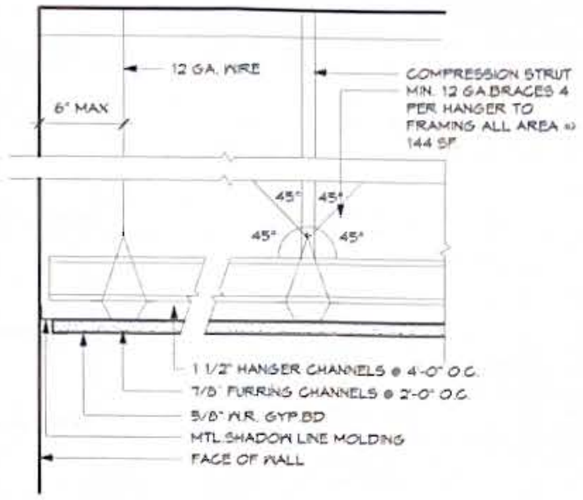

3 SEISMIC BRACING FOR SUSPENDED CEILING
SCALE: 3" = 1'-0"

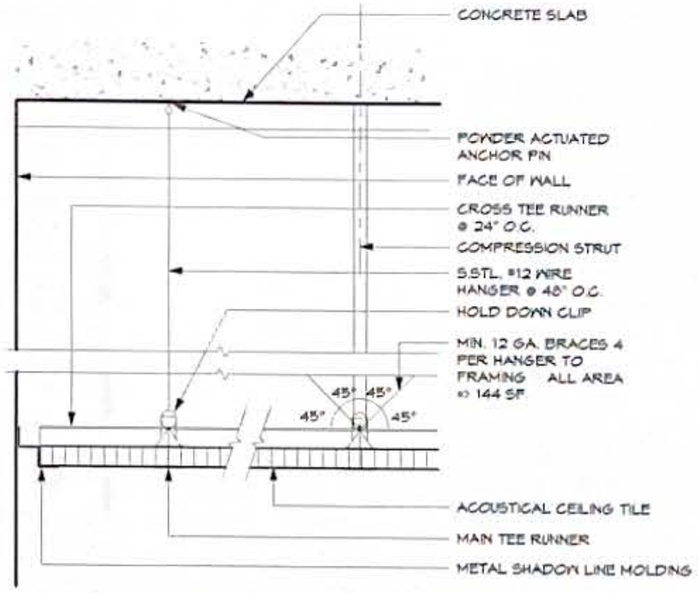

4 SUSPENDED ACOUSTICAL CEILING DETAIL
SCALE: 3" = 1'-0"

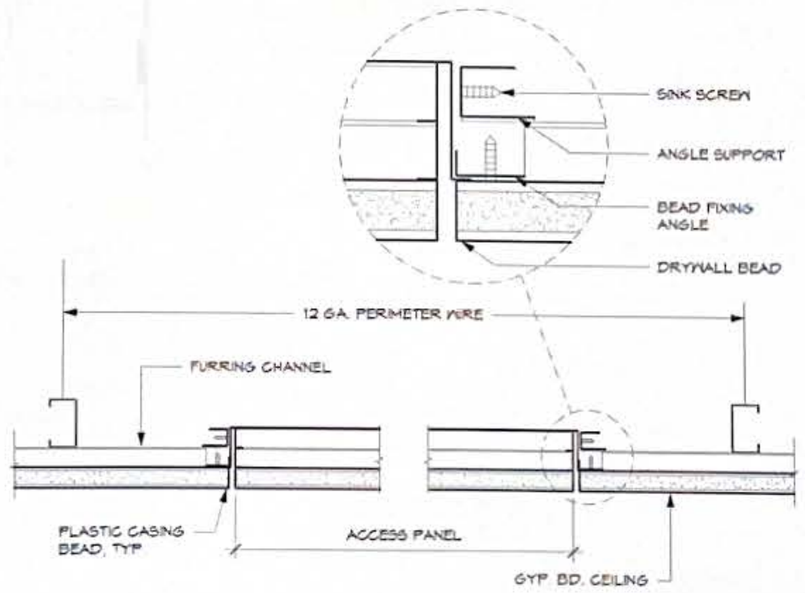

5 ACCESS PANEL DETAIL
SCALE: 3" = 1'-0"

GENERAL NOTE

1. ADJUST GYP BD PARTITIONS AT EXAM ROOM OPENINGS WHERE NECCESSARY TO RECEIVE NEW DOOR SYSTEMS.

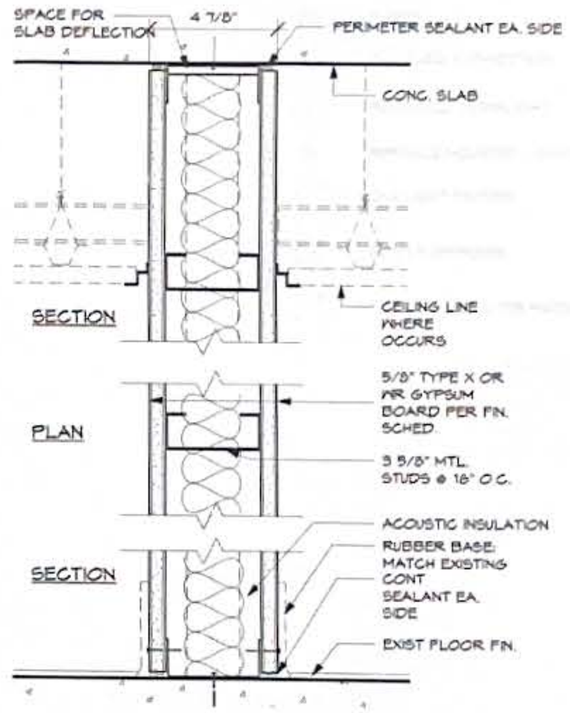

G1 WALL PARTITION
SCALE: 3" = 1'-0"

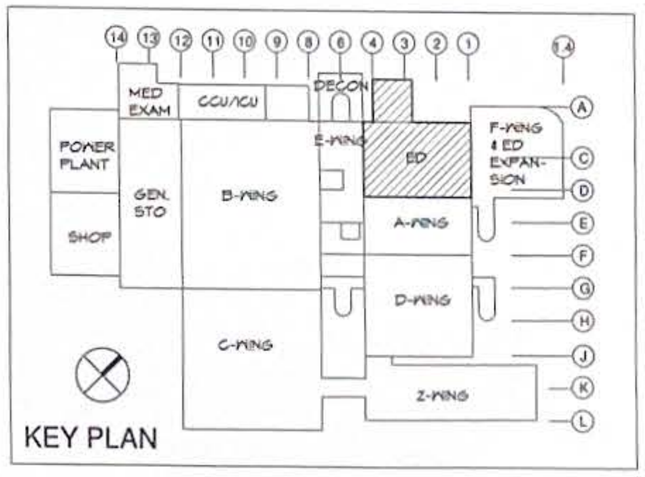

KEY PLAN

REVISIONS		
No.	Description	Date

RMT ENGINEERS, LLC
MECHANICAL AND FIRE PROTECTION ENGINEERING SERVICES
CONSTRUCTION MANAGEMENT SERVICES
P.O.BOX 6853, TAMUNING, GUAM 96931
TEL (671) 989 - 0768
Email: admin@rmtengineers.com

MICHAEL W. MARCO CERTIFICATE No. 24 REGISTERED ARCHITECT GUAM

I HEREBY CERTIFY THAT THIS PLAN WAS PREPARED BY ME OR UNDER MY DIRECT SUPERVISION.

DATE

TRMA
Taniguchi Ruth Makio Architects
100 Cliff Business Center, P.O. Box EA, Agana, GU 96910
Tel.: (671) 475-8772 • Fax.: (671) 472-3381
Architecture
Planning
Interior Design

Project
GMH URGENT CARE HVAC IMPROVEMENTS
GUAM MEMORIAL HOSPITAL
TAMUNING, GUAM

Title
DETAIL PLANS - PHASE 1, MISC. CEILING & WALL DETAILS
FINAL SUBMITTAL

Designed:	TRMA
Drawn:	RP
Checked:	NQ
Supv:	MWM/MGS
Scale:	As Indicated
Date:	10/11/2024
Project No.	AutoCAD File

Drawing No.
A1.2

Sheet No. 6 of 30

1 LEVEL 2 - RCP - PHASE 2
SCALE: 1/8" = 1'-0"

CEILING LEGEND

- NEW GYPSUM BD CLG. PAINT FINISH
- EXISTING GYPSUM BD CLG
- 24" X 18" ACCESS PANEL
- NEW 2' X 2' ACOUSTICAL TILES
- EXISTING 2' X 2' ACOUSTICAL TILES
- SPRINKLER
- SMOKE DETECTOR
- P.A SPEAKER
- EXIT SIGN
- CLOCK
- NURSE
- AHU ELEC. CONNECTION
- RECESSED DOWNLIGHT
- SURFACE MOUNTED LIGHTS
- 2X2 LIGHT FIXTURE
- SUPPLY DIFFUSER
- EXHAUST AIR FILTER MODULE

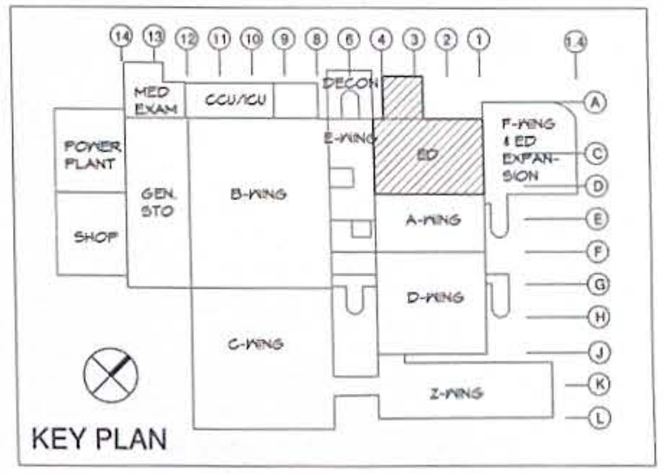

KEY PLAN

0 4' 8' 16'

REVISIONS		
No.	Description	Date

RMT ENGINEERS, LLC
MECHANICAL AND FIRE PROTECTION ENGINEERING SERVICES
CONSTRUCTION MANAGEMENT SERVICES
P.O.BOX 6853, TAMUNING, GUAM 96931
TEL: (671) 969 - 0768
Email: admin@rmtengineers.com

MICHAEL B. MANGLONA CERTIFICATE No. 3 GUAM REGISTERED ARCHITECT

I HEREBY CERTIFY THAT THIS PLAN WAS PREPARED BY ME OR UNDER MY DIRECT SUPERVISION

TRMA
Taniguchi Ruth Makio Architects
100 Cliff Business Center, P.O. Box EA, Agana, GU 96910
Tel.: (671) 475-8772 • Fax.: (671) 472-3381
Architecture
Planning
Interior Design

Project:
GMH URGENT CARE HVAC IMPROVEMENTS
GUAM MEMORIAL HOSPITAL
TAMUNING, GUAM

Title:
REFLECTED CEILING PLAN - PHASE 2

FINAL SUBMITTAL

Designed:	TRMA
Drawn:	RP
Checked:	NQ
Supv:	MWM/MGS
Scale:	1/8" = 1'-0"
Date:	10/11/2024
Project No.	AutoCAD File

Drawing No.
A2.1

Sheet No. 7 of 30

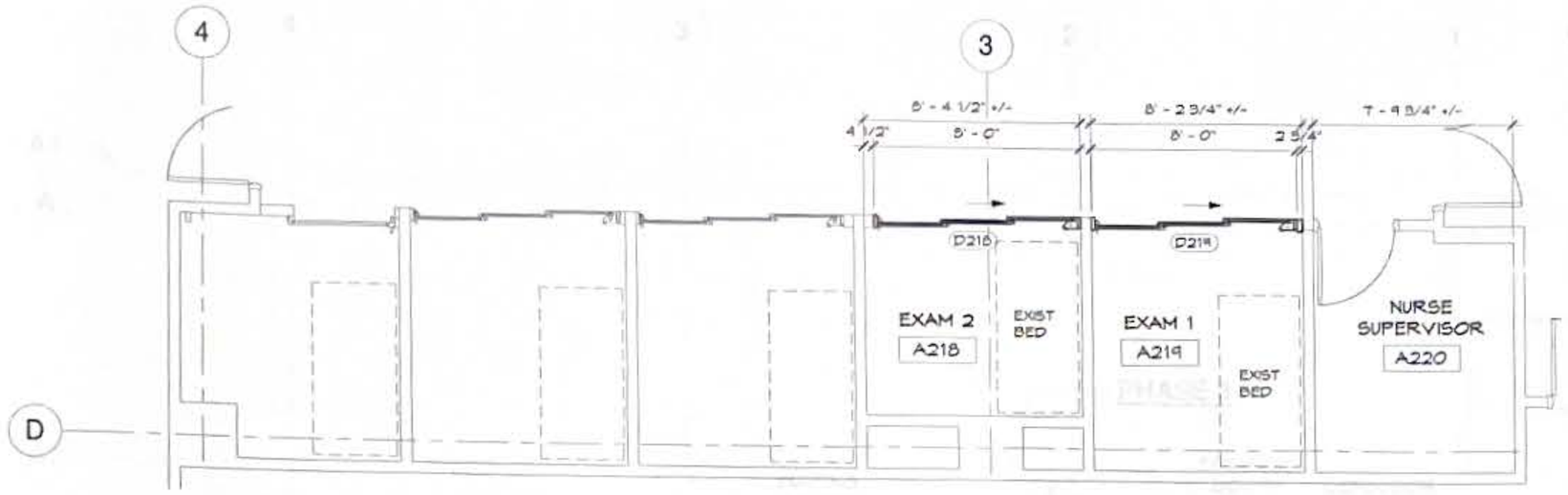

1 PHASE 2 - DETAIL FLOOR PLAN
SCALE: 1/4" = 1'-0"

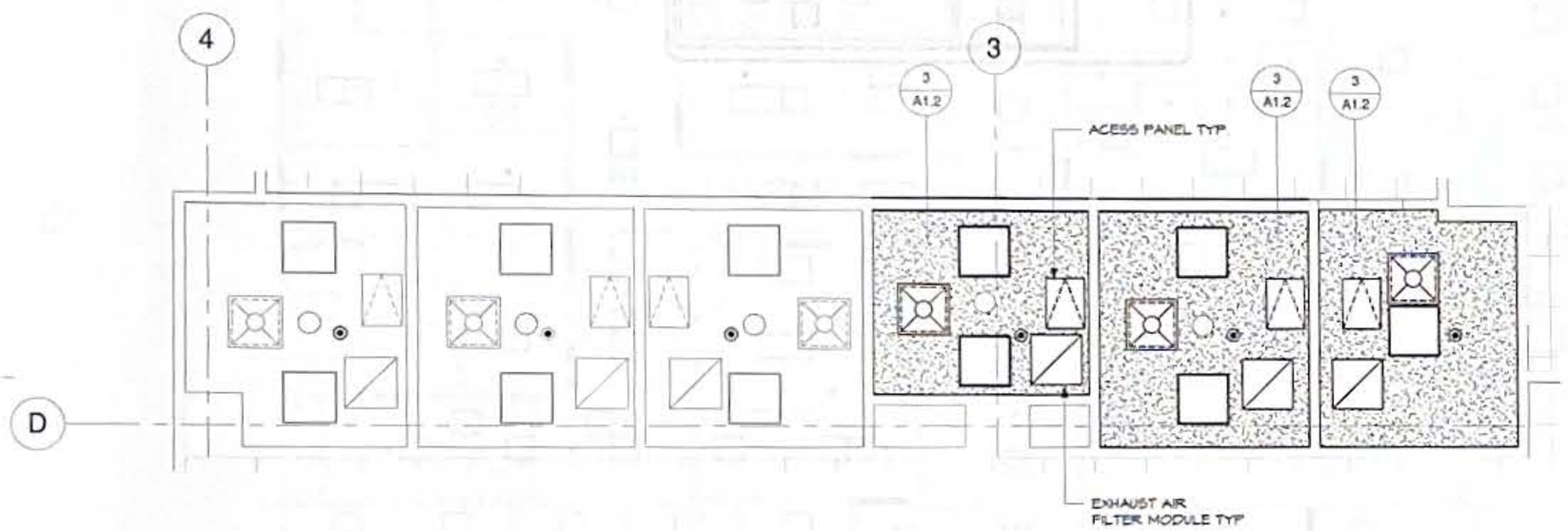

2 PHASE 2 - DETAIL RCP
SCALE: 1/4" = 1'-0"

GENERAL NOTE

1. ADJUST GYP BD PARTITIONS AT EXAM ROOM OPENINGS WHERE NECCESSARY TO RECEIVE NEW DOOR SYSTEMS.

HORTON: PROFILER-ICU SMOKE RATED
TYPE: 010 SINGLE SLIDE X-P
SURFACE APPLIED

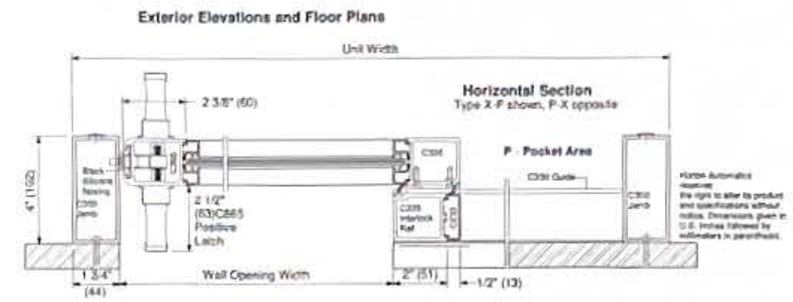

3 MANUAL SLIDING DOOR - HORIZONTAL SECTION
SCALE: 3" = 1'-0"

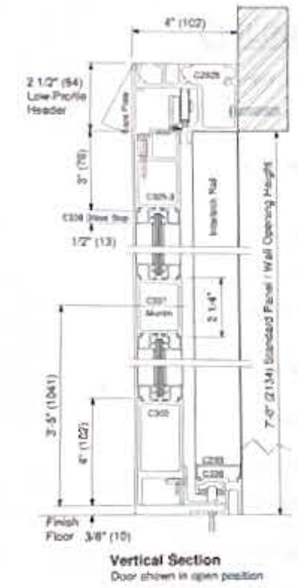

HORTON PROFILER-ICU SMOKE RATED
TYPE: 010 SINGLE SLIDE X-P
SURFACE APPLIED

4 MANUAL SLIDING DOOR - VERTICAL SECTION
SCALE: 3" = 1'-0"

HORTON: PROFILER-ICU SELF-CLOSING
TELESCOPING-IDS
TYPE 310T TRACKLESS SO-SX-SX

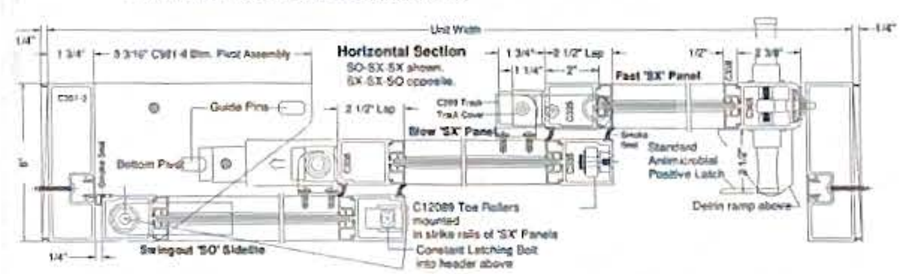

5 SELF-CLOSING SLIDING DOOR - HORIZONTAL SECTION
SCALE: 3" = 1'-0"

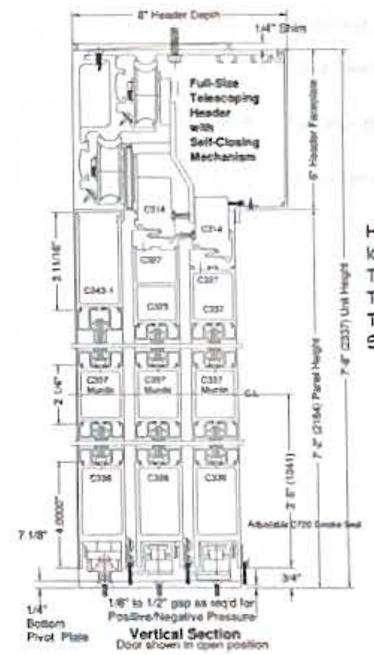

HORTON: PROFILER-ICU SELF-CLOSING
TELESCOPING-IDS
TYPE 310T TRACKLESS SO-SX-SX

6 SELF-CLOSING SLIDING DOOR - VERTICAL SECTION
SCALE: 3" = 1'-0"

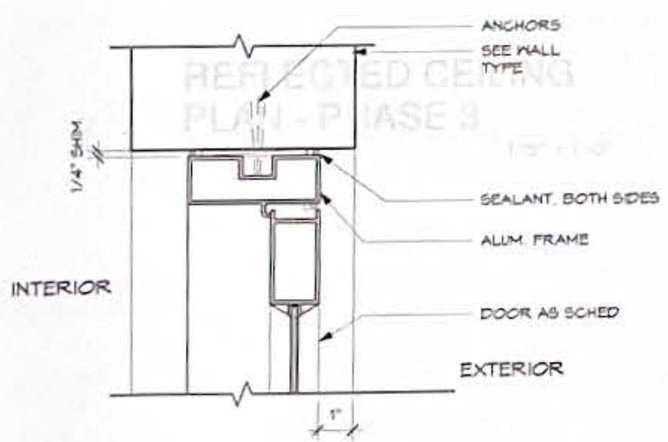

7 ALUM. DOOR HEAD/JAMB
SCALE: 3" = 1'-0"

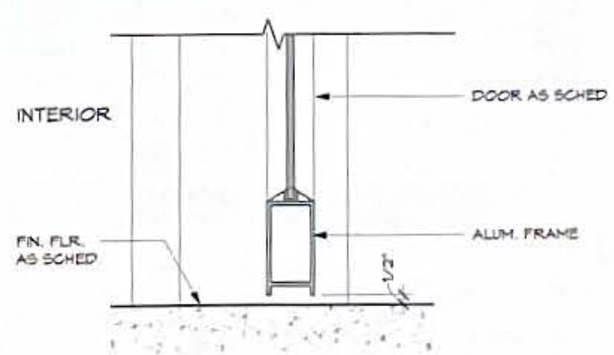

8 ALUM. DOOR SILL
SCALE: 3" = 1'-0"

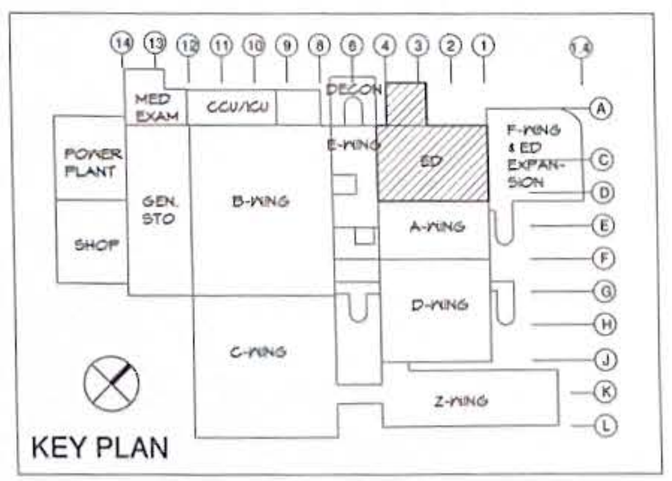

KEY PLAN

REVISIONS		
No.	Description	Date

RMT ENGINEERS, LLC
MECHANICAL AND FIRE PROTECTION ENGINEERING SERVICES
CONSTRUCTION MANAGEMENT SERVICES
P.O.BOX 6853, TAMUNING, GUAM 96931
TEL: (671) 969 - 0768
Email: admin@rmtengineers.com

TRMA
Taniguchi Ruth Makio Architects
100 Cliff Business Center, P.O. Box EA, Agana, GU 96910
Tel.: (671) 475-8772 • Fax.: (671) 472-3381
Architecture
Planning
Interior Design

Project:
GMH URGENT CARE
HVAC IMPROVEMENTS
GUAM MEMORIAL HOSPITAL
TAMUNING, GUAM

Title:
DETAIL FLOOR PLAN AND DETAIL REFLECTED CEILING PLAN - PHASE 2, MISC. DETAILS
FINAL SUBMITTAL

Designed:	TRMA
Drawn:	RP
Checked:	NQ
Supv:	MWM/MGS
Scale:	As Indicated
Date:	10/11/2024
Project No.	AutoCAD File

Drawing No.
A2.2
Sheet No. 8 of 30

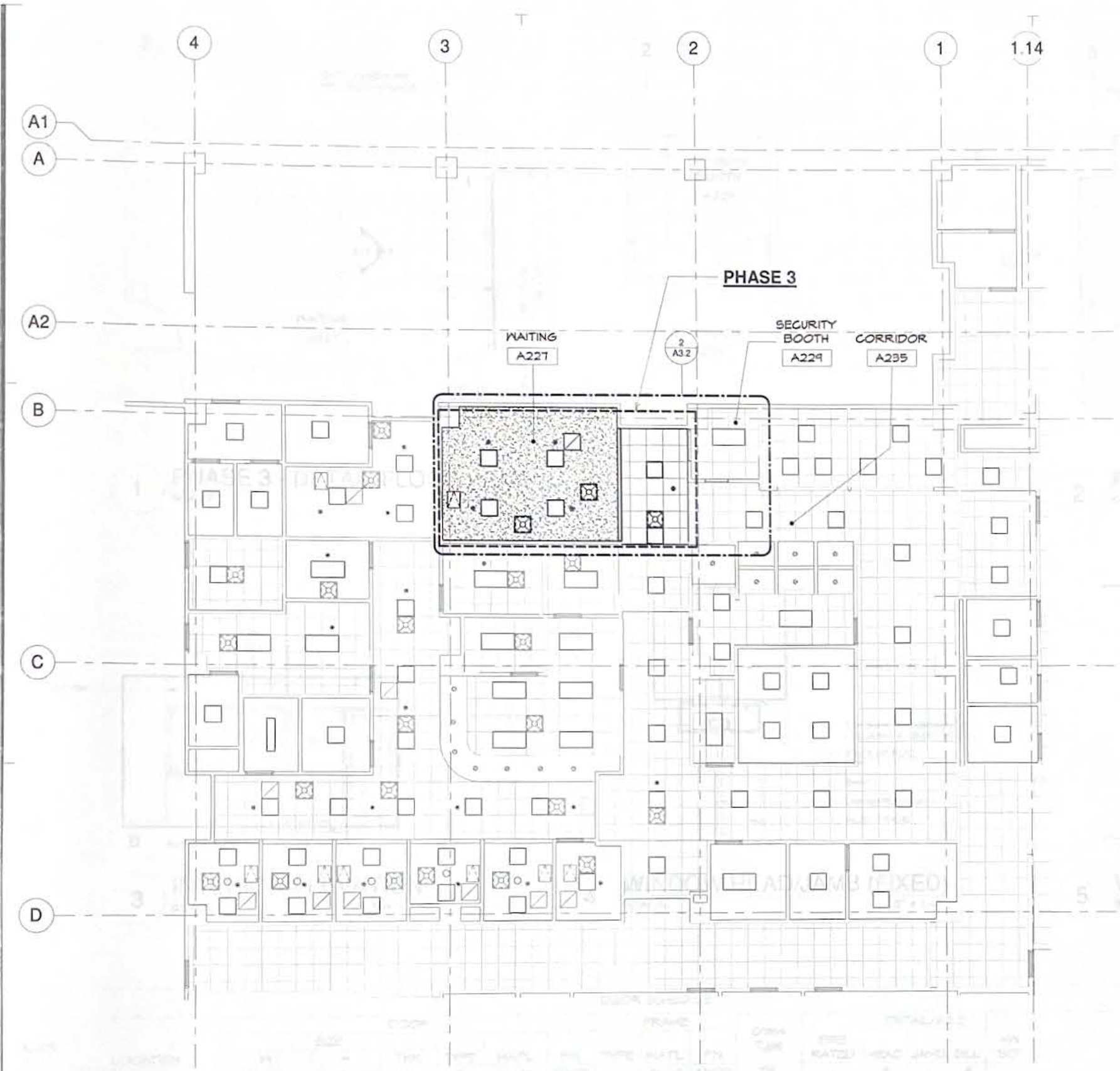

1 REFLECTED CEILING PLAN - PHASE 3

SCALE: 1/8" = 1'-0"

CEILING LEGEND

- NEW GYPSUM BD CLG. PAINT FINISH
- EXISTING GYPSUM BD. CLG
- 24" X 18" ACCESS PANEL
- NEW 2' X 2' ACOUSTICAL TILES
- EXISTING 2' X 2' ACOUSTICAL TILES
- SPRINKLER
- SMOKE DETECTOR
- P.A SPEAKER
- EXIT SIGN
- CLOCK
- NURSE
- AHU ELEC. CONNECTION
- RECESSED DOWNLIGHT
- SURFACE MOUNTED LIGHTS
- 2X2 LIGHT FIXTURE
- SUPPLY DIFFUSER
- EXHAUST AIR FILTER MODULE

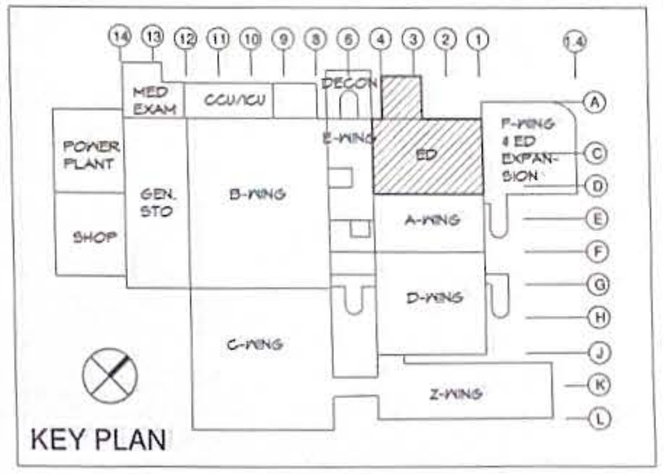

KEY PLAN

0 4' 8' 16'

REVISIONS		
No.	Description	Date

RMT ENGINEERS, LLC
MECHANICAL AND FIRE PROTECTION ENGINEERING SERVICES
CONSTRUCTION MANAGEMENT SERVICES
P.O.BOX 6853, TAMUNING, GUAM 96931
TEL: (671) 989 – 0768
Email: admin@rmtengineers.com

MICHAEL W. MAKIO CERTIFICATE NO. 3 GUAM REGISTERED ARCHITECT

I HEREBY CERTIFY THAT THIS PLAN WAS PREPARED BY ME OR UNDER MY DIRECT SUPERVISION

DATE

TRMA
Taniguchi Ruth Makio Architects
100 Cliff Business Center, P.O. Box EA, Agana, GU 96910
Tel.: (671) 475-8772 • Fax.: (671) 472-3381
Architecture
Planning
Interior Design

Project

GMH URGENT CARE HVAC IMPROVEMENTS

GUAM MEMORIAL HOSPITAL
TAMUNING, GUAM

Title

REFLECTED CEILING PLAN - PHASE 3

FINAL SUBMITTAL

Designed:	TRMA
Drawn:	RP
Checked:	NQ
Supv:	MWM/MGS
Scale:	1/8" = 1'-0"
Date:	10/11/2024
Project No.	AutoCAD File

Drawing No.

A3.1

Sheet No. 9 of 30

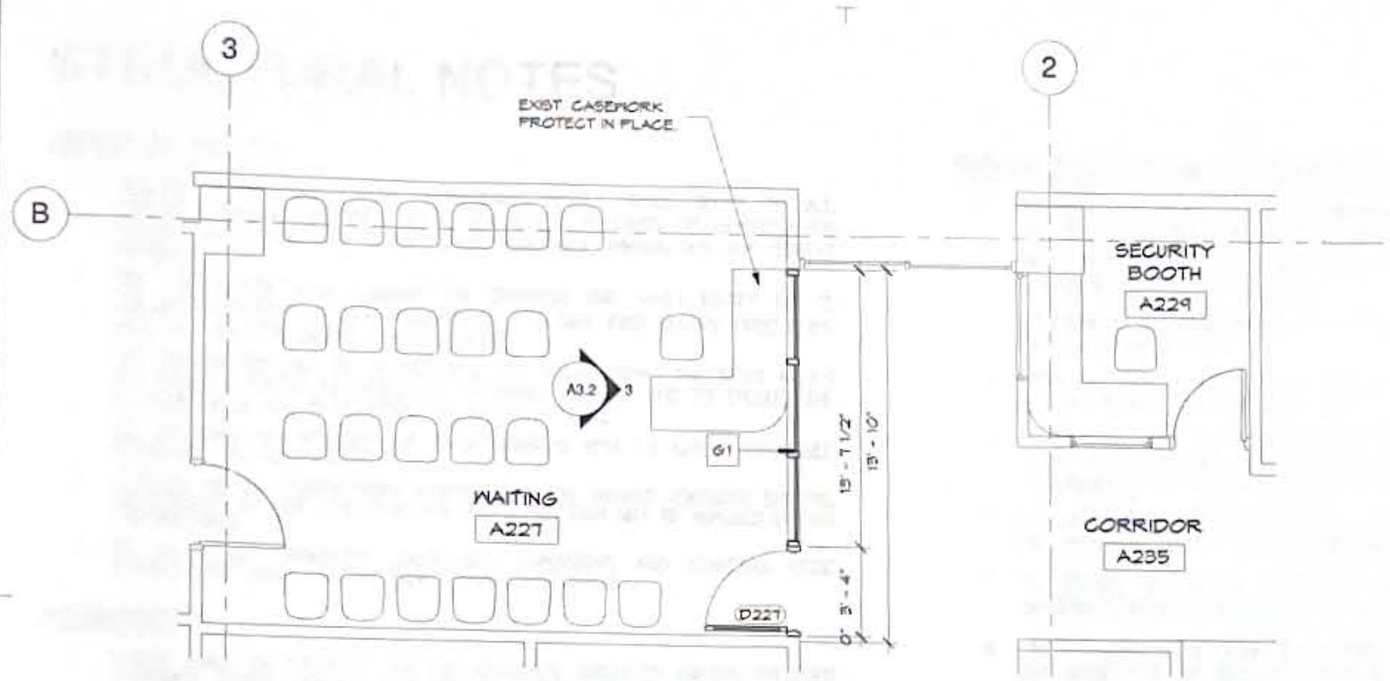

1 PHASE 3 - DETAIL FLOOR PLAN
SCALE: 1/4" = 1'-0"

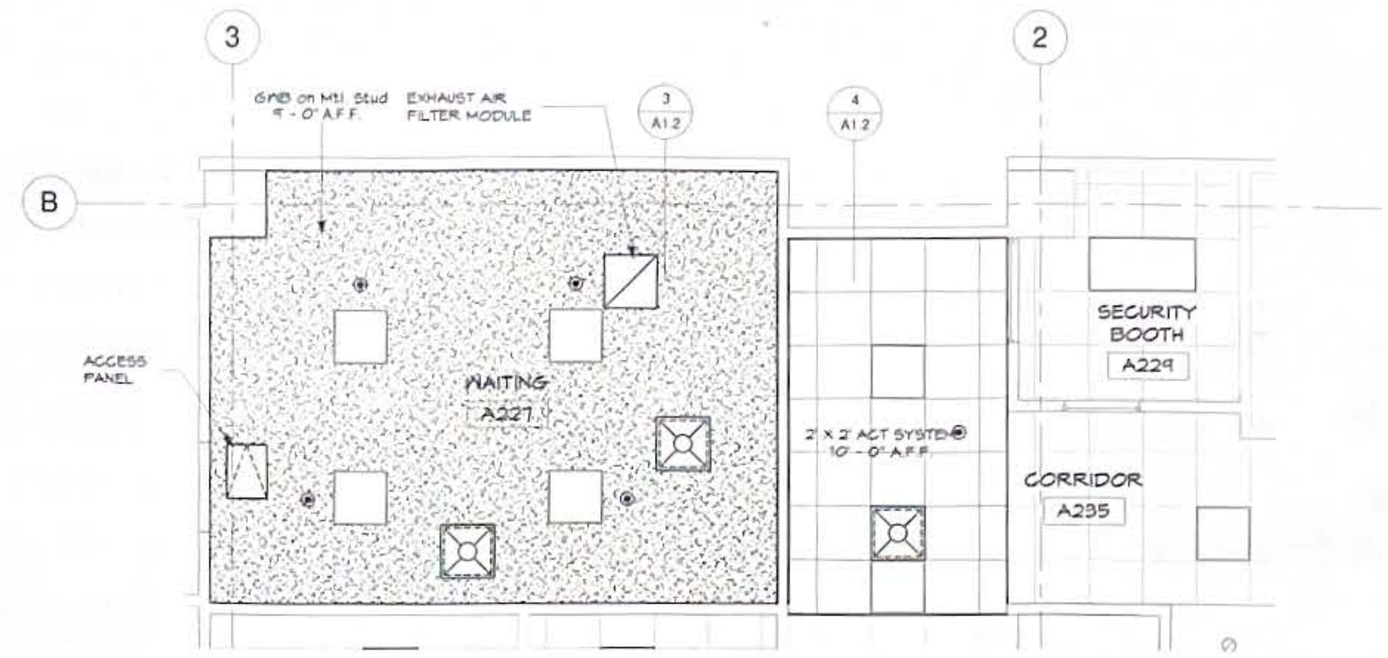

2 PHASE 3 - RCP DETAIL PLAN
SCALE: 1/4" = 1'-0"

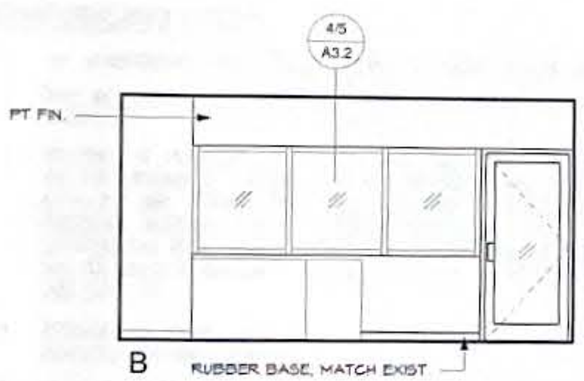

3 INTERIOR ELEVATION
SCALE: 1/4" = 1'-0"

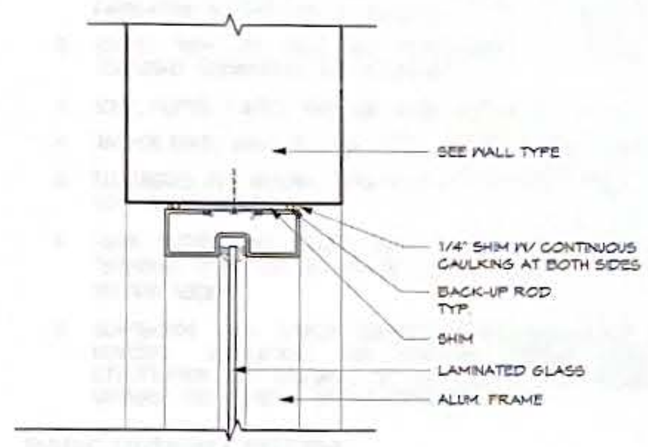

4 WINDOW HEAD/JAMB (FIXED)
SCALE: 3" = 1'-0"

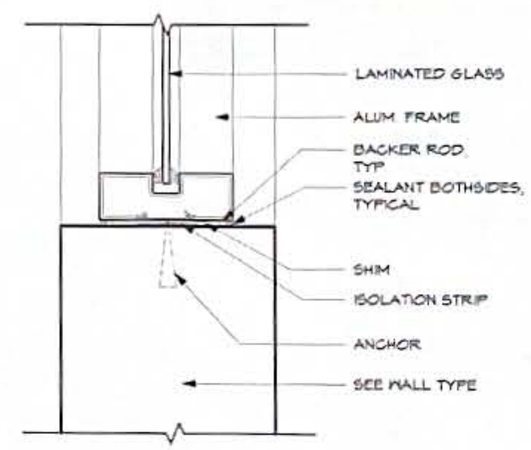

5 WINDOW SILL (FIXED)
SCALE: 3" = 1'-0"

DOOR SCHEDULE

DOOR NO	LOCATION	DOOR SIZE W	DOOR SIZE H	DOOR SIZE THK	DOOR TYPE	DOOR MAT'L	DOOR FIN	FRAME TYPE	FRAME MAT'L	FRAME FIN	Glass Type	FIRE RATED	DETAIL/A2.2 HEAD	DETAIL/A2.2 JAMB	DETAIL/A2.2 SILL	HW SET	REMARKS
D215	EXAM 5	8' - 0"	7' - 2 1/2"	4"	B	ALUM	ANOD	-	ALUM	ANOD	TG	-	3	-	4		
D216	EXAM 4	8' - 0"	7' - 8"	6"	A	ALUM	ANOD	-	ALUM	ANOD	TG	-	5	-	6		BREAKOUT GLASS SLIDING DOOR
D217	EXAM 3	8' - 0"	7' - 8"	6"	A	ALUM	ANOD	-	ALUM	ANOD	TG	-	5	-	6		BREAKOUT GLASS SLIDING DOOR
D218	EXAM 2	8' - 0"	7' - 8"	6"	A	ALUM	ANOD	-	ALUM	ANOD	TG	-	5	-	6		BREAKOUT GLASS SLIDING DOOR
D219	EXAM 1	8' - 0"	7' - 8"	6"	A	ALUM	ANOD	-	ALUM	ANOD	TG	-	5	-	6		BREAKOUT GLASS SLIDING DOOR
D227	WAITING	3' - 0"	7' - 0"	1 3/4"	C	ALUM	ANOD	F1	ALUM	ANOD	TG	-	7	7	8		

DOOR TYPES

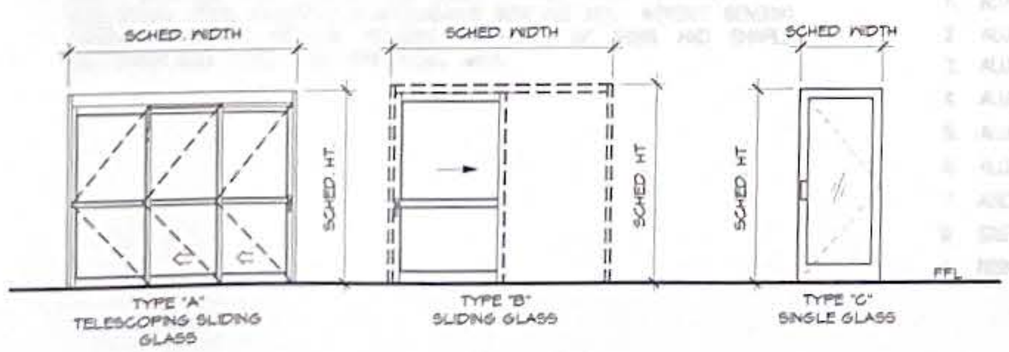

DOOR FRAME TYPE

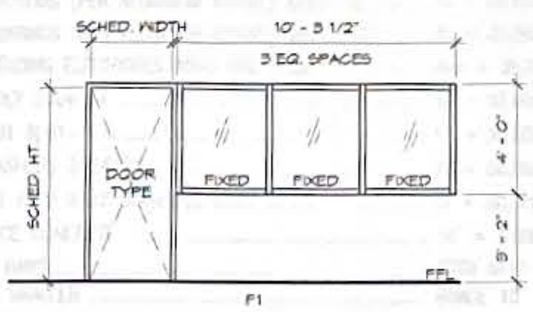

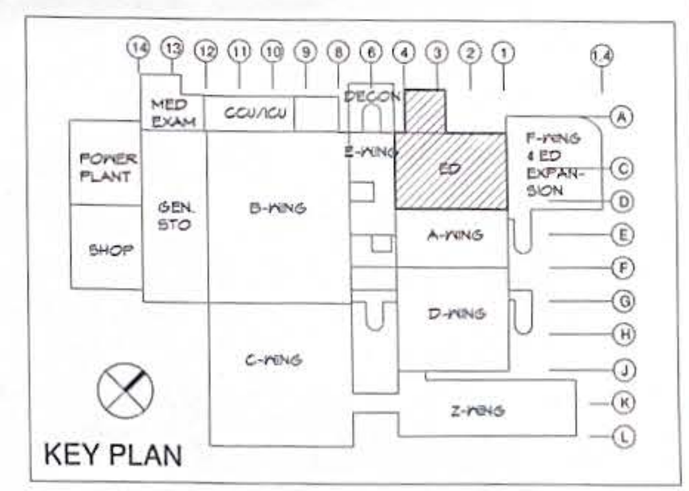

0' 2' 4' 8'

REVISIONS

No.	Description	Date

RMT ENGINEERS, LLC
MECHANICAL AND FIRE PROTECTION ENGINEERING SERVICES
CONSTRUCTION MANAGEMENT SERVICES
P.O.BOX 6853, TAMUNING, GUAM 96931
TEL: (671) 969 - 0768
Email: admin@rmtengineers.com

I HEREBY CERTIFY THAT THIS PLAN WAS PREPARED BY ME OR UNDER MY DIRECT SUPERVISION.

DATE

TRMA
Taniguchi Ruth Makio Architects
100 Cliff Business Center, P.O. Box EA, Agana, GU 96910
Tel.: (671) 475-8772 • Fax.: (671) 472-3381
Architecture
Planning
Interior Design

Project:
GMH URGENT CARE HVAC IMPROVEMENTS
GUAM MEMORIAL HOSPITAL
TAMUNING, GUAM

Title:
DETAIL PLANS AND INT. ELEV. - PHASE 3, WINDOW DETAILS, DOOR SCHEDULES, TYPES, AND FRAME
FINAL SUBMITTAL

Designed:	TRMA
Drawn:	RP
Checked:	NQ
Supv:	MWM/MGS
Scale:	As indicated
Date:	10/11/2024
Project No.	AutoCAD File

Drawing No.
A3.2

Sheet No. 10 of 30

STRUCTURAL NOTES

GENERAL NOTES

1. GENERAL NOTES AND TYPICAL STRUCTURAL DETAILS SHALL APPLY TO ALL DRAWINGS UNLESS OTHERWISE SHOWN OR NOTED. FEATURES OF CONSTRUCTION SHOWN ARE TYPICAL AND SHALL APPLY GENERALLY THROUGHOUT FOR SIMILAR CONDITIONS.
2. THE CONTRACTOR SHALL EXAMINE THE DRAWINGS AND SHALL NOTIFY THE 2. ENGINEER/ARCHITECT OF ANY DISCREPANCIES HE MAY FIND BEFORE PROCEEDING WITH THE WORK OR DURING CONSTRUCTION.
3. THE CONTRACTOR WILL BE RESPONSIBLE FOR COORDINATING THE WORK AMONG THE VARIOUS TRADES AS NECESSARY TO AVOID CONFLICT AND TO ENSURE THE INSTALLATION OF ALL WORK WITHIN THE AVAILABLE SPACE.
4. ALL MATERIALS AND WORKMANSHIP SHALL CONFORM WITH THE LATEST APPLICABLE STANDARDS OR SPECIFICATIONS.
5. IT SHALL BE THE CONTRACTORS RESPONSIBILITY TO PROVIDE ADEQUATE SHORING AND BRACING OF THE STRUCTURE FOR ALL LOADS THAT MAY BE IMPOSED DURING CONSTRUCTION.
6. DO NOT SCALE DRAWINGS, CALLED-OUT DIMENSIONS AND STANDARD CODE REQUIREMENRT SHALL GOVERN OVER UNSCALED DRAWINGS.

FORMWORK

1. FORMS SHALL BE PROVIDED FOR ALL CONCRETE INDICATED UNLESS SPECIFIED OTHERWISE. FORMS SHALL BE SET TRUE TO LINE AND GRADE AND MAINTAINED SO AS TO ENSURE COMPLETED WORK WITHIN THE ALLOWABLE TOLERANCES SPECIFIED AND SHALL BE MORTAR TIGHT.
2. FORMS AND THEIR SUPPORTS SHALL BE DESIGNED SO AS NOT TO DAMAGE PREVIOUSLY PLACES STRUCTURE.
3. NO CONSTRUCTION LOAD SHALL BE SUPPORTED ON, NOR ANY SHORING REMOVED FROM ANY PART OF STRUCTURE UNDER CONSTRUCTION EXCEPT WHEN THAT PORTION OF THE STRUCTURE IN COMBINATION WITH THE THE REMAINING FORMING AND SHORING/BRACING SYSTEM HAS SUFFICIENT STRENGTH TO SUPPORT SAFELY ITS WEIGHT AND THE ADDITIONAL IMPOSED LOADS.
4. FORMS SHALL BE REMOVED IN SUCH MANNER AS NOT TO IMPAIR SAFETY AND SERVICEABILITY OF THE STRUCTURE.

REINFORCING STEEL

1. ALL REINFORCING BARS SHALL CONFORM TO BASIC DESIGN CRITERIA.
2. ANY WELDING TO BE PERFORMED MUST HAVE PRIOR WRITTEN APPROVAL OF THE ENGINEER.
3. WELDING OF REINFORCING STEEL IS NOT PERMITTED UNLESS OTHERWISE SHOWN ON THE DRAWINGS. WELDING OF REINFORCING STEEL SHALL CONFORM TO AWS D1.4-79 AWS STRUCTURAL WELDING CODE -REINFORCING STEEL OF THE AMERICAN WELDING SOCIETY. REINFORCING STEEL WHICH IS WELDED SHALL CONFORM TO ASTM A 706. REINFORCING STEEL NOT CONFORMING TO ASTM A706 MAY BE USED IF MATERIAL PROPERTIES OF THE REINFORCING STEEL CONFORM TO AWS D1.4-79.
4. REINFORCING BARS SHALL BE SPLICED 42d (d= BAR DIAMETER) ONLY AS INDICATED ON THE DRAWINGS.
5. PROVIDE DOWELS IN FOOTINGS AND/OR GRADE BEAMS THE SAME SIZE AND SPACING AS COLUMN AND WALL REINFORCING, UNLESS OTHERWISE NOTED.
6. WELDED WIRE FABRIC (WWF) SHALL CONFORM TO ASTM A-185. WELDED WIRE FABRIC IN SUSPENDED SLABS SHALL HAVE FY = 60 KSI. LAP 12" MINIMUM OR TWO FULL MESH, WHICHEVER IS GREATER FOR SLABS ON GRADE.
7. MINIMUM CONCRETE COVER FOR REINFORCING BARS SHALL BE:
   - CONCRETE CAST AGAINST EARTH ..... 3"
   - EXPOSED TO EXTERIOR OR WEATHER
     - #6 BAR THROUGH #18 BAR ..... 2"
     - #5 BAR, W31 OR D31 WIRE, AND SMALLER ..... 1 1/2"
   - SLAB ON GRADE ..... 2"
   - COLUMNS & BEAMS ..... 1 1/2"
   - STRUCTURAL SLABS TOP & BOT. (INTERIOR) ..... 1 1/2" & 3/4"
8. IN GENERAL, BAR SPLICES SHALL BE MADE AT POINTS OF MINIMUM STRESS. SPLICES SHALL BE SECURELY WIRED TOGETHER. STAGGER SPLICES AT LEAST 24" WHENEVER POSSIBLE IN BEAMS AND SLABS. SPLICE TOP BARS AT MIDSPAN AND BOTTOM BARS NEAR SUPPORT. SPLICE OF REINFORCEMENT SHALL BE MADE ONLY AS REQUIRED OR PERMITTED ON DESIGN DRAWINGS OR AS ALLOWED BY THE ACI CODE OR AS AUTHORIZED BY THE ENGINEER.
9. ANCHOR BOLTS, DOWELS AND OTHER EMBEDDED ITEMS ARE TO BE SECURELY TIED IN PLACE BEFORE CONCRETE IS POURED.
10. ALL REINFORCING BAR BENDS SHALL BE COLD BENT PER ACI 315.
11. SHOP DRAWINGS: THE CONTRACTOR SHALL SUBMIT SHOP DRAWINGS FOR REINFORCING STEEL PREPARED IN ACCORDANCE WITH ACI 315. INDICATE BENDING DIAGRAM, ASSEMBLY DIAGRAM, SPLICING AND LAPS OF RODS AND SHAPES DIMENSIONS AND DETAILS FOR REINFORCING BARS.

REINFORCED CONCRETE NOTES

1. ALL CONCRETE SHALL DEVELOP A MINIMUM ULTIMATE COMPRESSIVE STRENGTH AT THE END OF 28 DAYS, AS SPECIFIED UNDER BASIC DESIGN CRITERIA.
2. ALL CONCRETE WORK SHALL CONFORM TO THE LATEST CODE OF THE AMERICAN CONCRETE INSTITUTE (ACI 318-05).
3. LOCATION OF ALL CONSTRUCTION OR CONTRACTION JOINTS MUST BE APPROVED BY THE ENGINEER/ARCHITECT.
4. PIPES OR DUCTS EXCEEDING ONE THIRD OF THE SLAB OR WALL THICKNESS SHALL NOT BE PLACED IN STRUCTURAL CONCRETE UNLESS SPECIFICALLY DETAILED.
5. REINFORCING BARS, ANCHOR BOLTS, AND OTHER INSERTS SHALL BE SECURED IN PLACE BEFORE POURING. CONCRETE BAR PLACEMENT AND SUPPORTS SHALLBE IN ACCORDANCE WITH THE RECOMMENDED ACI PRACTICE.
6. ALL INSERTS, ANCHOR BOLTS, PLATES, ETC. TO BE EMBEDDED IN CONCRETE SHALL BE HOT DIP GALVANIZED UNLESS OTHERWISE NOTED.
7. IN GENERAL, THE LATEST EDITION OF "MANUAL OF STANDARD PRACTICE FOR DETAILING CONCRETE STRUCTURES" ACI 315, SHALL BE ADHERED.
8. USE OF ADMIXTURE IS PERMITTED TO PRODUCE PROPER SLUMP AND WORKABILITY BUT SUBJECT TO THE ENGINEER'S APPROVAL. ADDITION OF WATER TO CONCRETE AT JOBSITE IS NOT ALLOWED.
9. 48 HOURS PRIOR TO THE PLACEMENT OF ANY STRUCTURAL CONCRETE THE CONTRACTOR SHALL NOTIFY THE ENGINEER SO AN INSPECTION CAN BE MADE ON ALL FORMS AND REINFORCING.

STRUCTURAL & LIGHT GAGE STEEL

1. ALL STRUCTURAL MILL SECTIONS OR WELDED UP PLATE SECTIONS SHALL BE DESIGNED IN ACCORDANCE WITH AISC'S LATEST "SPECIFICATION FOR THE DESIGN, FABRICATION AND ERECTION OF STRUCTURAL STEEL FOR BUILDINGS".
2. COMPLY WITH AISC CODE AND SPECIFICATIONS FOR BEARING, ADEQUACY OF TEMPORARY CONNECTIONS AND ALIGNMENT.
3. STEEL PLATES, SHAPES, BARS AND METAL FABRICATIONS: ASTM A-36
4. ANCHOR BOLTS SHALL BE ASTM F1554, UNLESS OTHERWISE NOTED.
5. ELECTRODES FOR WELDING: ASTM A233 E-70XX SERIES; COMPLY WITH AWS D1.0 CODE REQUIREMENTS.
6. FLAME CUTTING AND WELDING SHALL BE DONE IN ACCORDANCE WITH LATEST "STANDARD CODE FOR WELDING IN BUILDING CONSTRUCTION OF THE AMERICAN WELDING SOCIETY".
7. CONTRACTOR SHALL FURNISH COMPLETE DESIGN CALCULATIONS FOR ALL STEEL MEMBERS, CONNECTIONS AND ERECTION DRAWINGS FOR THE PROPER IDENTIFICATION AND ASSEMBLY OF ALL BUILDING COMPONENTS. SUBMIT SHOP DRAWINGS FOR APPROVAL BEFORE FABRICATION.

BASIC DESIGN CRITERIA

A. CODES AND REFERENCES
1. IBC-2009 INTERNATIONAL BUILDING CODE
2. ASCE 7-05 MINIMUM DESIGN LOAD FOR BUILDING & STRUCTURES
3. ALUMINUM DESIGN MANUAL
4. AISC AMERICAN INSTITUTE OF STEEL CONSTRUCTION 7th EDITION
5. ACI 318-09 BUILDING CODE REQUIREMENTS FOR REINF. CONCRETE
7. ALCOA ALUMINUM HANDBOOK

B. LOADING
1. DEAD LOAD ..... ACTUAL
   A.) CONCRETE ..... ACTUAL
2. WIND LOAD
   A.) BASIC WIND SPEED ..... V = 170 mph
   B.) VELOCITY PRESSURE ..... qh = 74 psf
3. MAINTENANCE PLATFORM ..... 50 psf
4. SEISMIC RISK ZONE 4 REQUIREMENT
   A.) AS PER ASCE 7-05 RISK CATEGORY III
   B.) IMPORTANCE FACTOR ..... Ie = 1.25

C. MATERIAL STRESSES
1. ALUMINUM SECTIONS (PER ALUMINUM ASSOC.) 6061-T6 ..... fy = 35,000 psi
2. ALUMINUM GRATINGS (PER ALUMINUM ASSOC.) 6061-T6 ..... fy = 35,000 psi
3. ALUMINUM WELDING ELECTRODES 4043 ARC 5153 ..... fsw = 35,000 psi
4. ALUMINUM BOLT 2024-T4 ..... fy = 47,000 psi
5. ALUMINUM NUT 6061-T6 ..... fy = 35,000 psi
6. ALUMINUM WASHERS 2024-T3 ..... fy = 50,000 psi
7. ANCHOR BOLT ASTM A307 STAINLESS STEEL ..... fy = 60,000 psi
8. CAST-IN-PLACE CONCRETE ..... fc' = 3,000 psi
9. REINFORCING BARS ..... ASTM A615
   - #4 AND SMALLER ..... GRADE 40
   - #5 AND LARGER ..... GRADE 60

RECOMMENDED END HOOKS ALL GRADES OF STEEL

D = FINISHED BEND DIAMETER

BAR SIZE	D (in.)	180° HOOKS (ft-in.) A or G	180° HOOKS (ft-in.) J	90° HOOKS (ft-in.) A or G
#3	2-1/4	0-5	0-3	0-6
#4	3	0-6	0-4	0-8
#5	3-3/4	0-7	0-5	0-10
#6	4-1/2	0-8	0-6	1-0
#7	5-1/4	0-10	0-7	1-2
#8	6	0-11	0-8	1-4
#9	9-1/2	1-3	0-11 3/4	1-7
#10	10-3/4"	1-5	1-1 1/4	1-10
#11	12	1-7	1-2 3/4	2-0
#14	18 1/4	2-3	1-9 3/4	2-7
#18	24	3-0	2-4 1/2	3-5

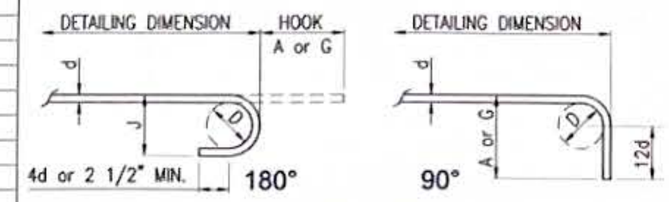

MAIN REINFORCEMENT

STIRRUP (TIES SIMILAR) STIRRUP/TIE HOOK DIMENSIONS ALL GRADES OF STEEL

BAR SIZE	D (in.)	135° HOOKS (in.) HOOK A or G	135° HOOKS (in.) H (APPROX.)	90° HOOKS (ft-in.) HOOK A or G
#3	1-1/2	4	2 1/2	0-4
#4	2	4-1/2	3	0-4 1/2
#5	2-1/2	5-1/2	3-3/4	0-6
#6	4-1/2	8	4-1/2	1-0
#7	5-1/4	9	5-1/4	1-2
#8	6	10-1/2	6	1-4

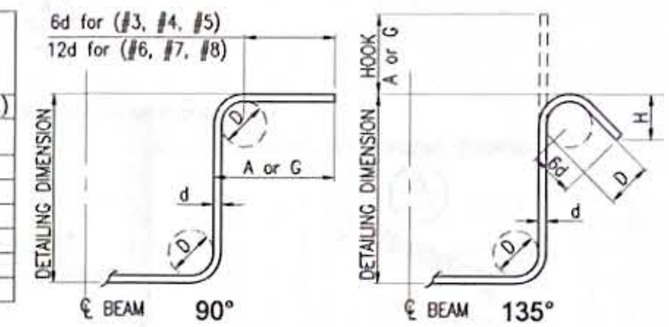

STIRRUPS AND HOOKS DETAIL

1 TYP. HOOKS & BEND DETAIL
SCALE: N.T.S

TABLE OF LAP SPLICE AND ANCHORAGE LENGTH

BAR SIZE	LAP SPLICE LENGTH TYPE A	ANCHORAGE LENGTH Ldh
#3	24"	0'-6"
#4	24"	0'-8"
#5	27"	0'-10"
#6	32"	1'-0"
#7	37"	1'-2"
#8	42"	1'-4"
#9	48"	1'-6"

NOTE: NOT MORE THAN 50% OF THE BARS SHALL BE SPLICED WITHIN THE REQUIRED LAP LENGTH

2 SPLICE & ANCHORAGE TABLE
SCALE: N.T.S

REVISIONS

No.	Description	Date

RMT ENGINEERS, LLC
MECHANICAL AND FIRE PROTECTION ENGINEERING SERVICES
CONSTRUCTION MANAGEMENT SERVICES
P.O. BOX 6853, TAMUNING, GUAM 96931
TEL (671) 969 - 0768
Email: admin@rmtengineers.com

I HEREBY CERTIFY THAT THIS PLAN WAS PREPARED BY ME OR UNDER MY DIRECT SUPERVISION
DATE: 10/21/2024

N.C. MACARIO & ASSOCIATES, INC.
P.O. Box 784 Hagatna, Guam 96932
Tel. 646-0947/48 Fax: 646-0901
Email: office@ncmacario.com

Project:
GMH URGENT CARE HVAC IMPROVEMENTS
GUAM MEMORIAL HOSPITAL TAMUNING, GUAM

Title:
STRUCTURAL NOTES

FINAL SUBMITTAL

Designed:	JFD / NCM
Drawn:	KS
Checked:	JMC
Supv:	NCM
Scale:	AS SHOWN
Date:	10/25/24
Project No. 61K2112	AutoCAD File GMH URGENT CARE

Drawing No.
S0.1

Sheet No. 11 of 30

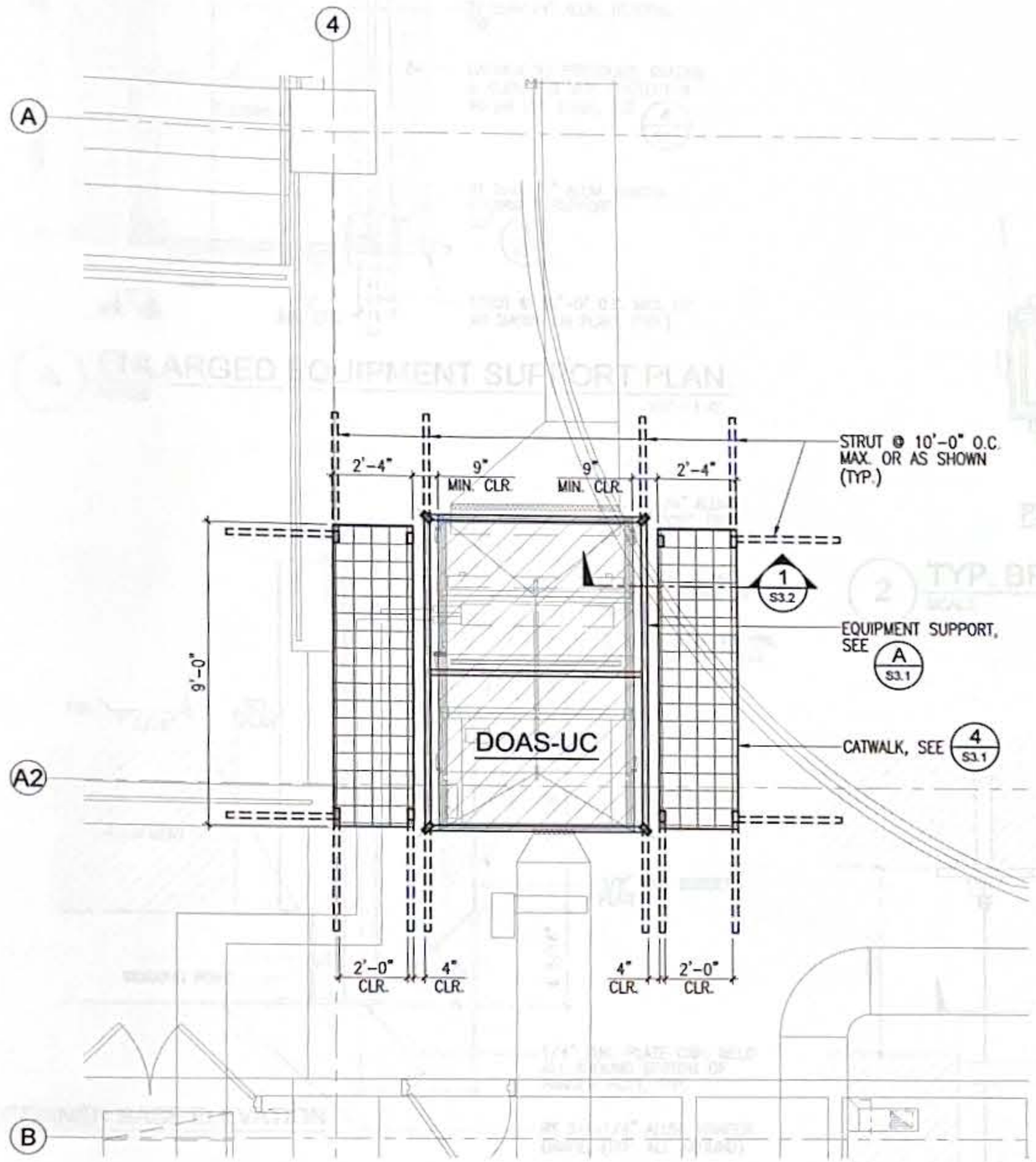

A EQUIPMENT SUPPORT & CATWALK PLAN (DOAS-UC)
SCALE: 3/8" = 1'-0"

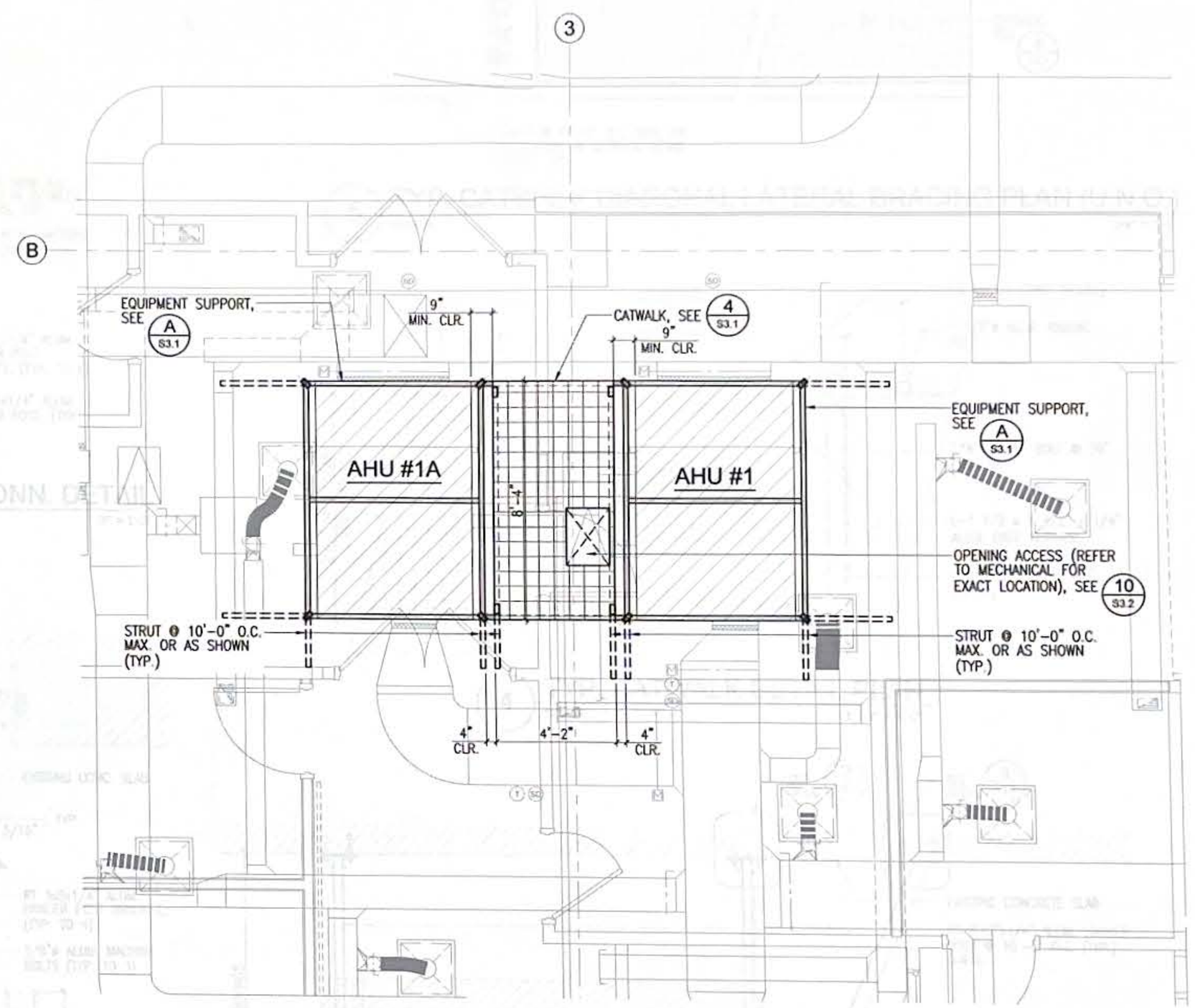

B EQUIPMENT SUPPORT & CATWALK PLAN (AHU #1 & #1A)
SCALE: 3/8" = 1'-0"

NOTE:
NEW FRAME AND BRACING TO FIELD VERIFY LOCATION PRIOR TO CONSTRUCTION

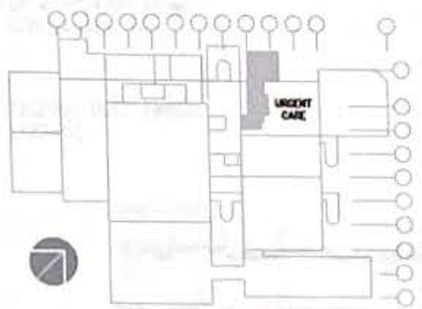

KEY PLAN

GRAPHIC SCALE
1' 0 1' 2' 4' 7'
SCALE: 3/8"=1'-0"

REVISIONS

No.	Description	Date

RMT ENGINEERS, LLC
MECHANICAL AND FIRE PROTECTION ENGINEERING SERVICES
CONSTRUCTION MANAGEMENT SERVICES
P.O. BOX 6853, TAMUNING, GUAM 96931
TEL. (671) 969 - 0768
Email: admin@rmtengineers.com

I HEREBY CERTIFY THAT THIS PLAN WAS PREPARED BY ME OR UNDER MY DIRECT SUPERVISION
DATE: 10/21/2024

N.C. MACARIO & ASSOCIATES, INC.
P.O. Box 784 Hagatna, Guam 96932
Tel. 646-0947/48 Fax: 646-0901
Email: office@ncmacario.com

Project:
GMH URGENT CARE HVAC IMPROVEMENTS
GUAM MEMORIAL HOSPITAL TAMUNING, GUAM

Title:
EQUIPMENT SUPPORT & CATWALK PLAN
FINAL SUBMITTAL

Designed:	JFD / NCM
Drawn:	KS
Checked:	JMC
Supv:	NCM
Scale:	AS SHOWN
Date:	10/25/24
Project No. 61K2112	AutoCAD File GMH URGENT CARE

Drawing No.
S2.1
Sheet No. 12 of 30

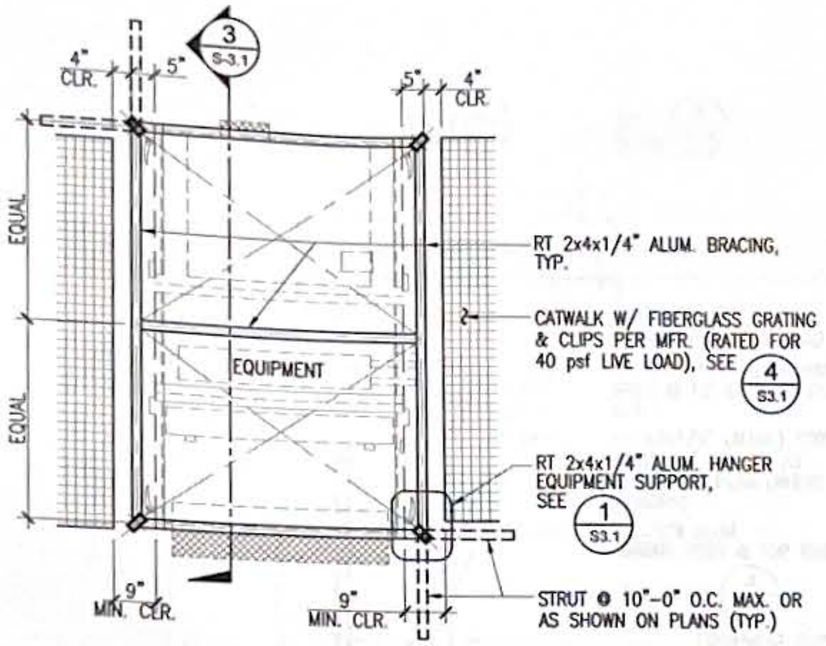

A ENLARGED EQUIPMENT SUPPORT PLAN

SCALE: 1/2" = 1'-0"

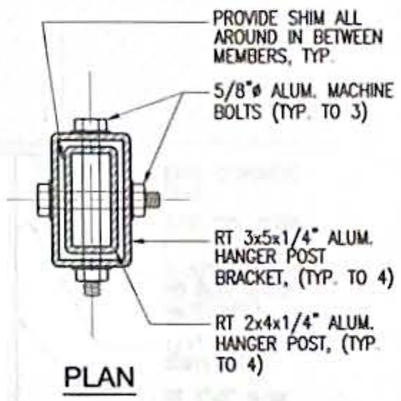

2 TYP. BRACKET CONN. DETAIL

SCALE: 3" = 1'-0"

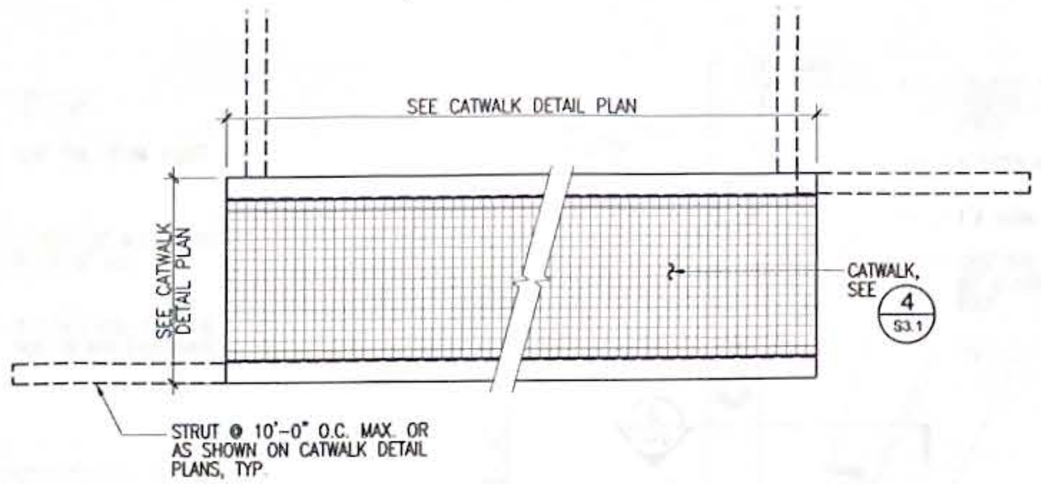

5 TYP. CATWALK DIAGONAL LATERAL BRACING PLAN (U.N.O.)

SCALE: 3/4" = 1'-0"

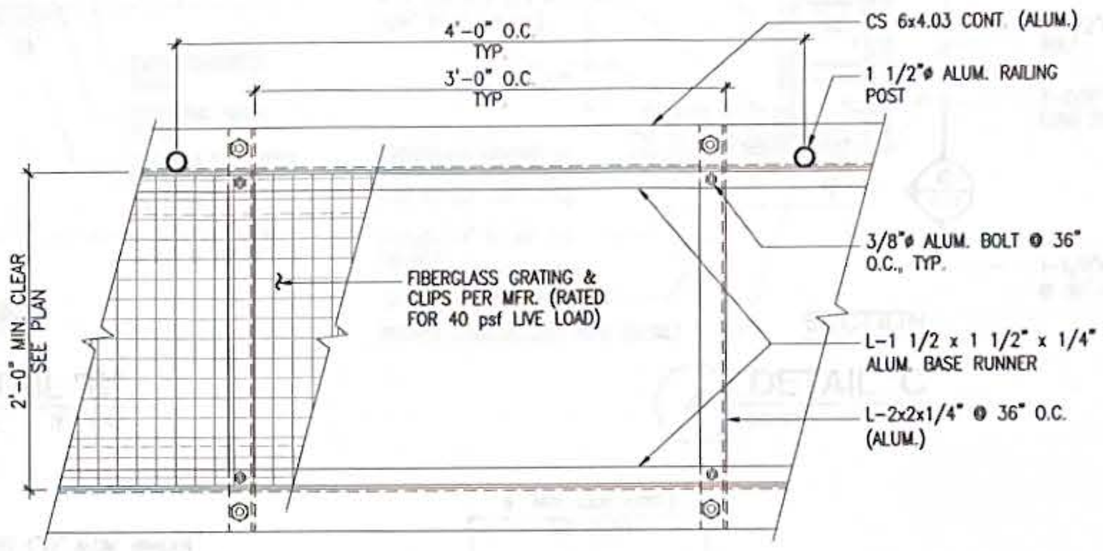

4 TYP. CATWALK DETAIL PLAN

SCALE: 1 1/2" = 1'-0"

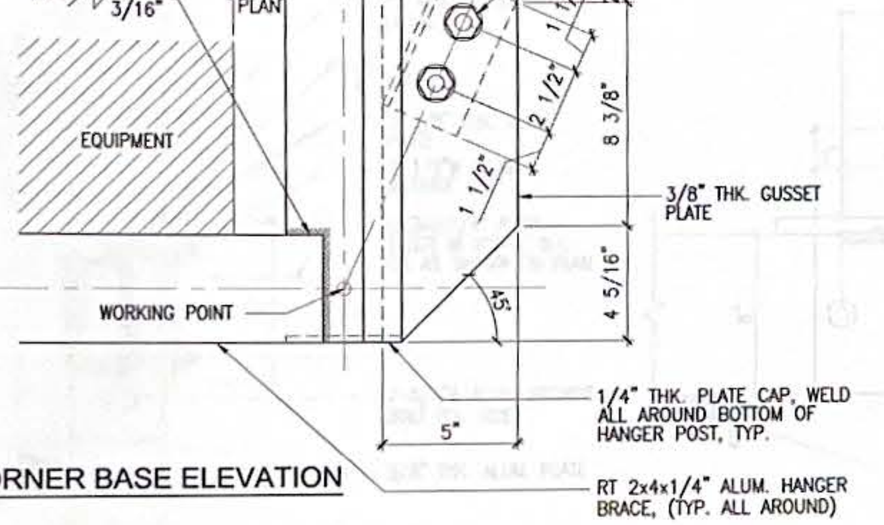

CORNER BASE ELEVATION

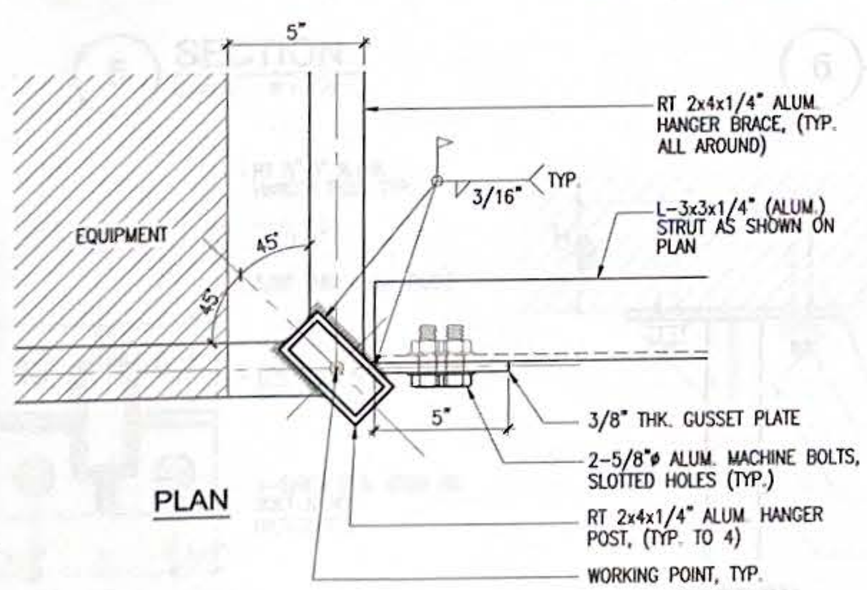

PLAN

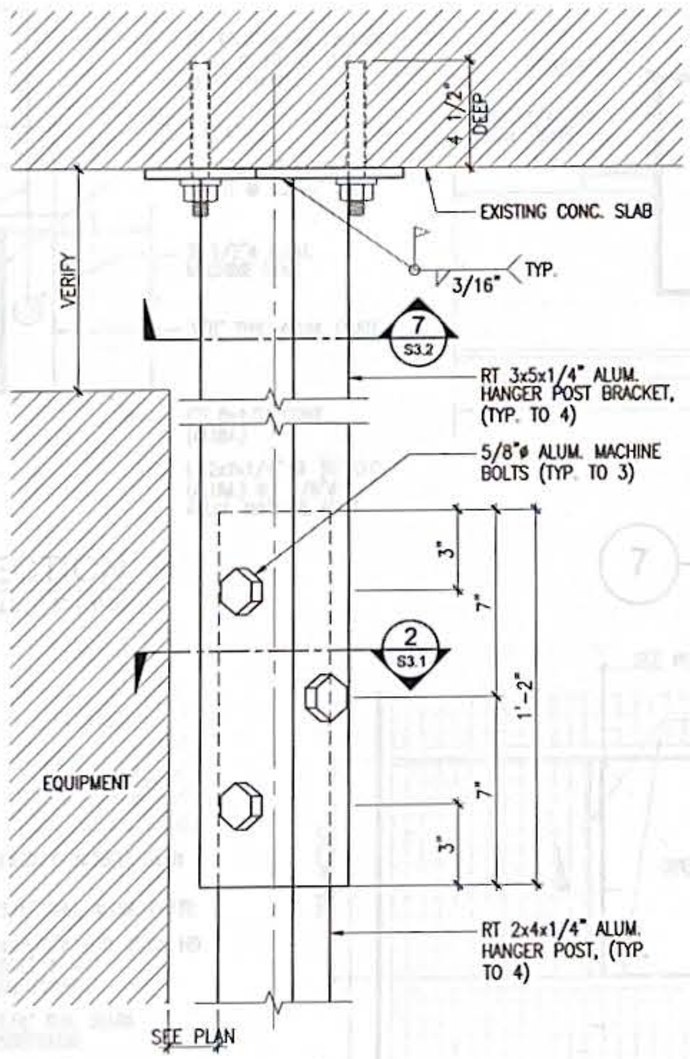

TOP ELEVATION

1 TYP. EQUIPMENT SUPPORT CONNECTION DETAILS

SCALE: 3" = 1'-0"

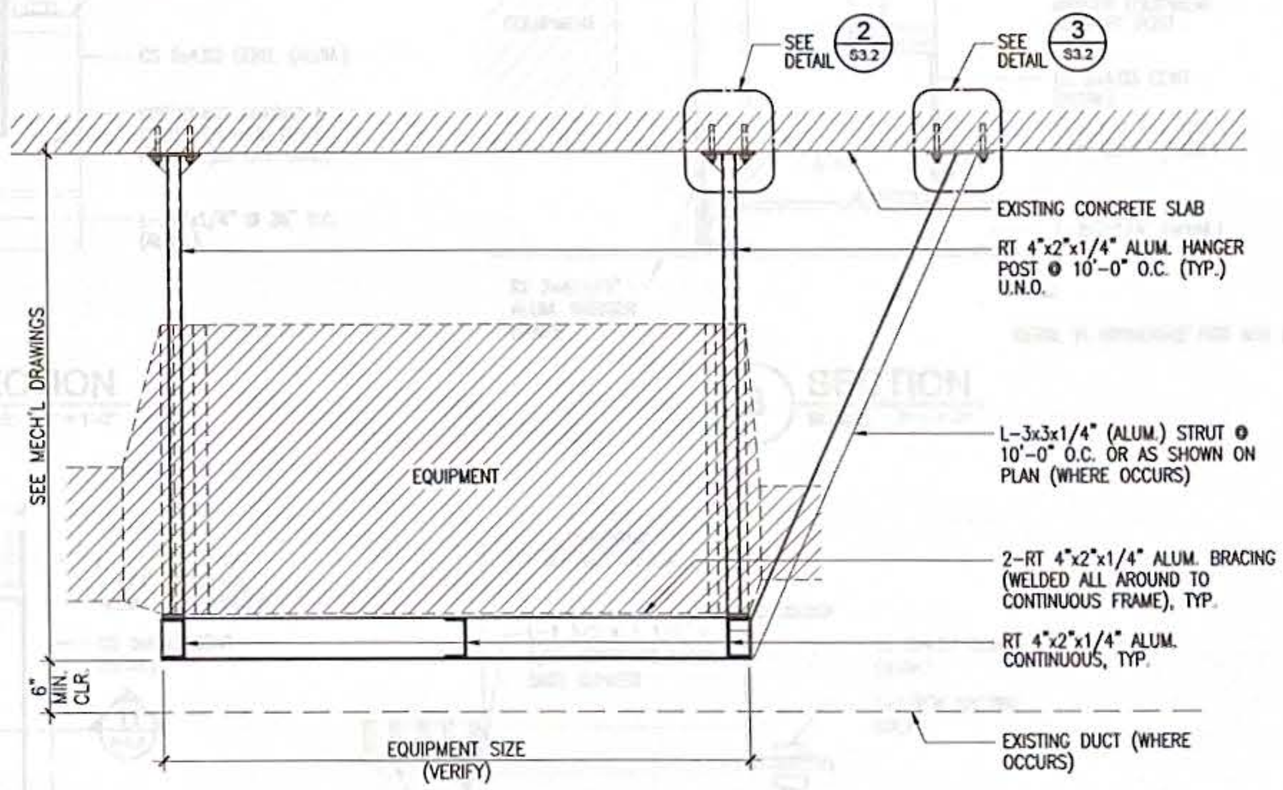

3 EQUIPMENT BRACING SECTION

SCALE: 3/4" = 1'-0"

GRAPHIC SCALE:

SCALE: 1/2"=1'-0"

SCALE: 3"=1'-0"

SCALE: 3/4"=1'-0"

SCALE: 1-1/2"=1'-0"

REVISIONS		
No.	Description	Date

RMT ENGINEERS, LLC
MECHANICAL AND FIRE PROTECTION ENGINEERING SERVICES
CONSTRUCTION MANAGEMENT SERVICES
P.O. BOX 6853, TAMUNING, GUAM 96931
TEL. (671) 969 - 0768
Email: admin@rmtengineers.com

I HEREBY CERTIFY THAT THIS PLAN WAS PREPARED BY ME OR UNDER MY DIRECT SUPERVISION

DATE: 10/31/2024

N.C. MACARIO & ASSOCIATES, INC.
P.O. Box 784 Hagatna, Guam 96932
Tel. 646-0947/48 Fax. 646-0901
Email: office@ncmacario.com

Project:

GMH URGENT CARE HVAC IMPROVEMENTS

GUAM MEMORIAL HOSPITAL TAMUNING, GUAM

Title:

DETAILS

FINAL SUBMITTAL

Designed:	JFD / NCM
Drawn:	KS
Checked:	JMC
Supv:	NCM
Scale:	AS SHOWN
Date:	10/25/24
Project No. 61K2112	AutoCAD File GMH URGENT CARE

Drawing No.

S3.1

Sheet No. 13 of 30

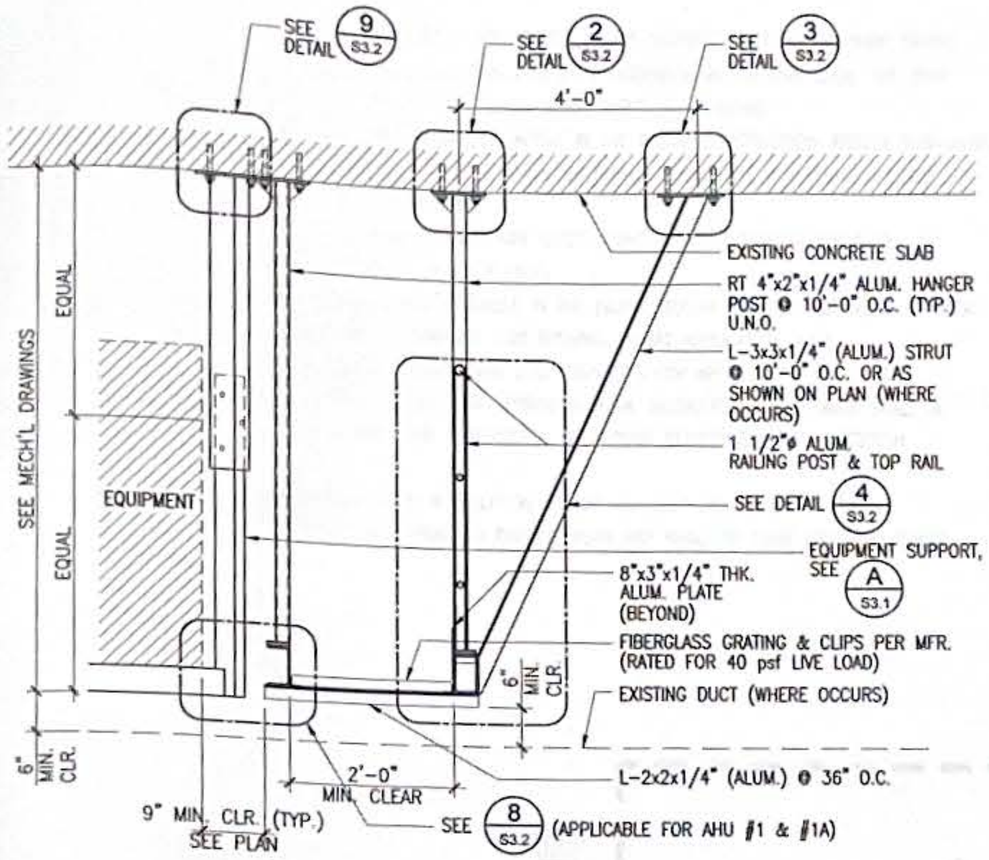

1 TYP. CATWALK SECTION
SCALE: 3/4" = 1'-0"

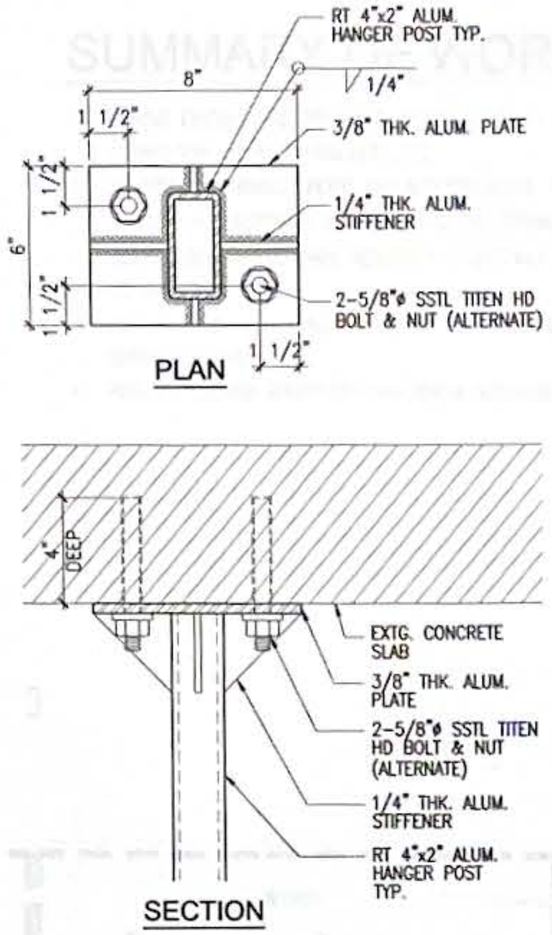

2 DETAIL "A"
SCALE: 3" = 1'-0"

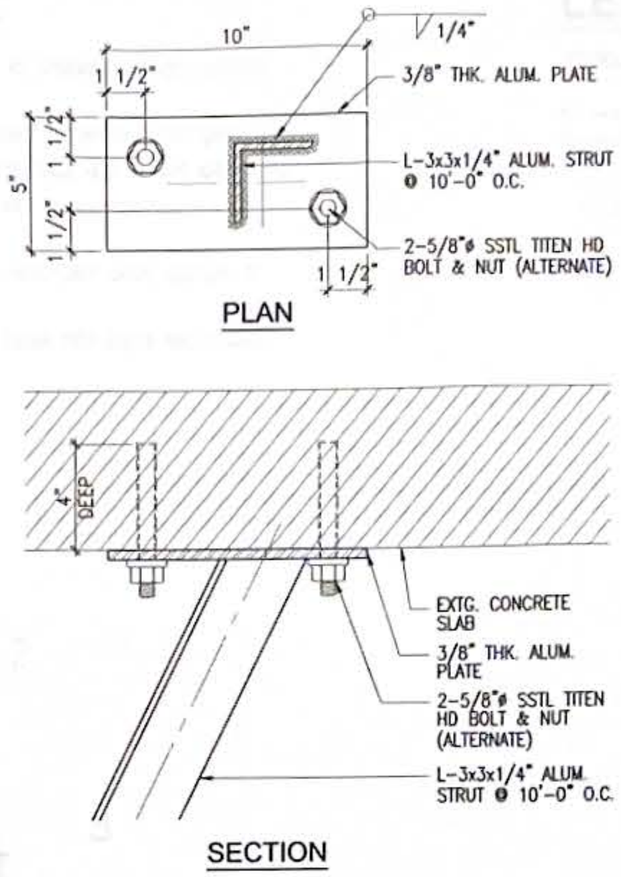

3 DETAIL "B"
SCALE: 3" = 1'-0"

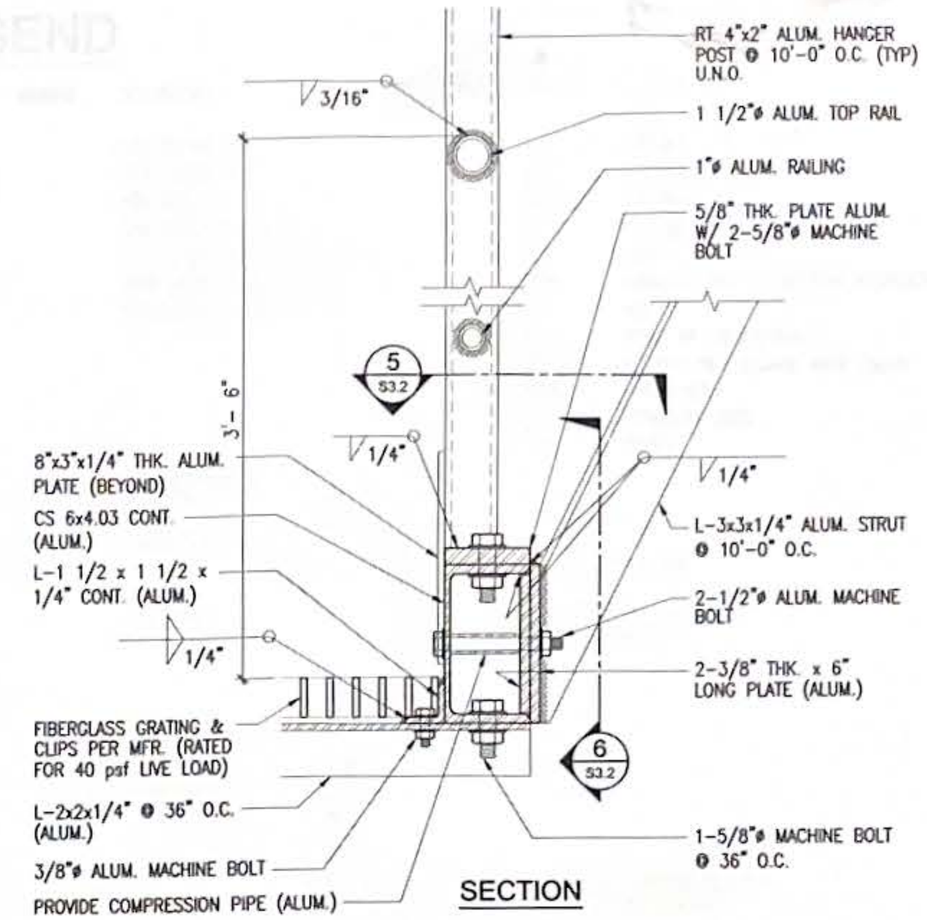

4 DETAIL "C"
SCALE: 3" = 1'-0"

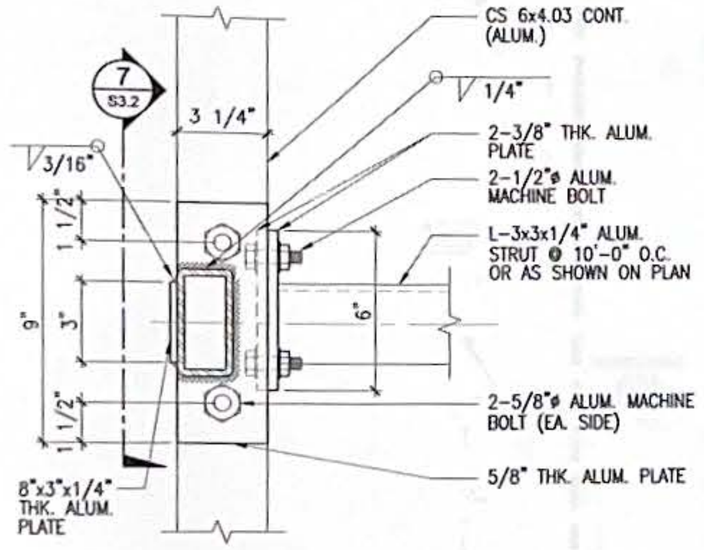

5 SECTION
SCALE: 3" = 1'-0"

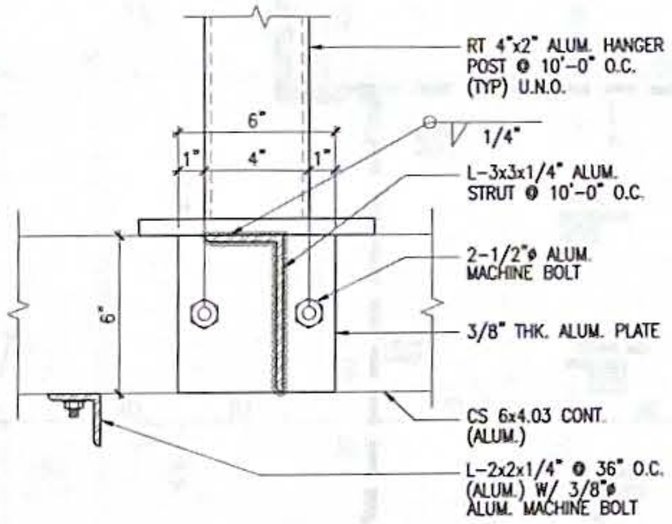

6 SECTION
SCALE: 3" = 1'-0"

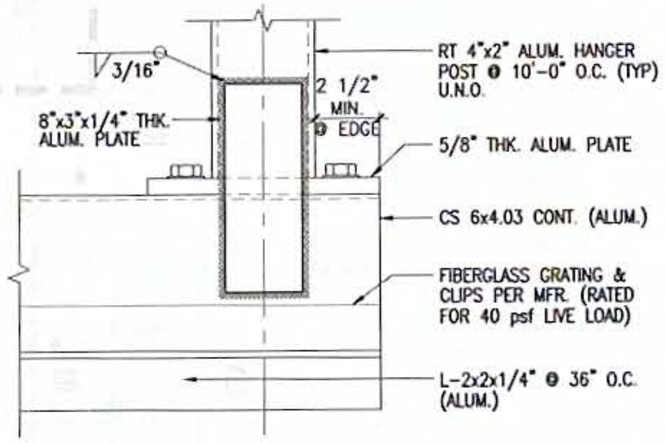

7 SECTION
SCALE: 3" = 1'-0"

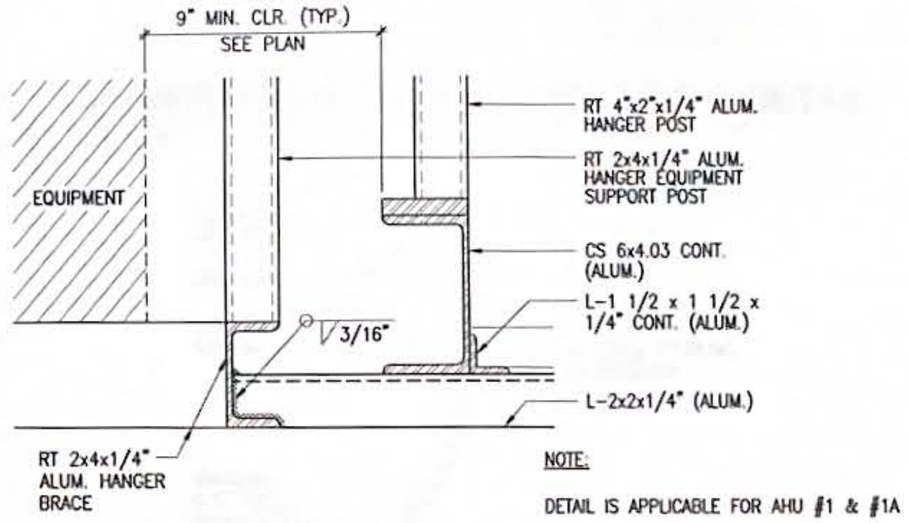

NOTE:
DETAIL IS APPLICABLE FOR AHU #1 & #1A

8 SECTION
SCALE: 3" = 1'-0"

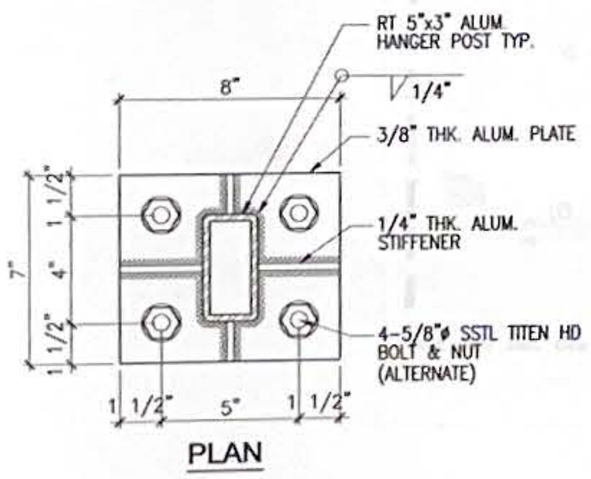

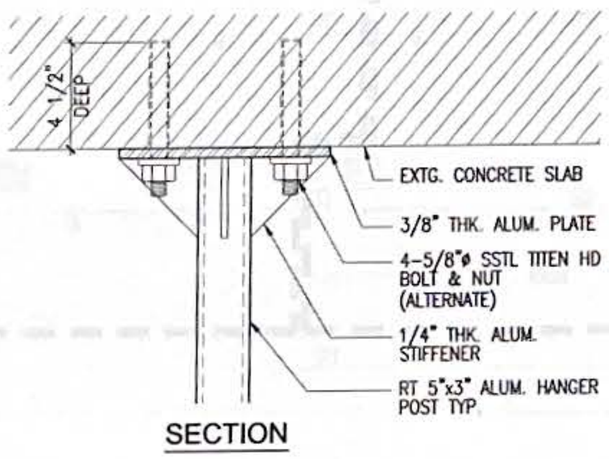

9 DETAIL "D"
SCALE: 3" = 1'-0"

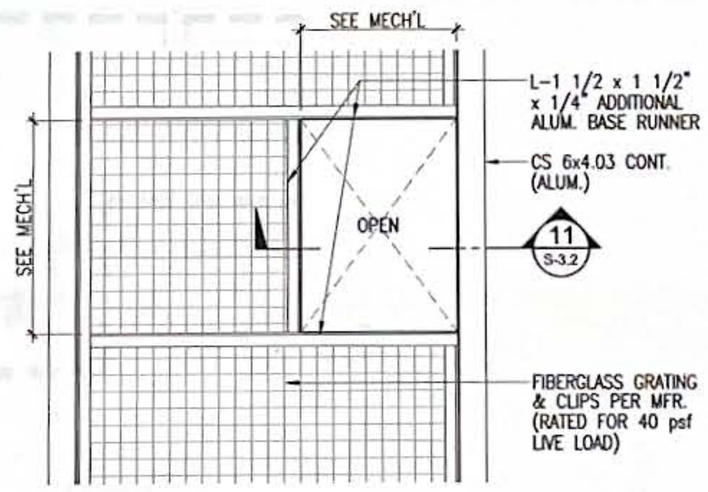

10 OPENING ACCESS ENLARGED PLAN
SCALE: 1" = 1'-0"

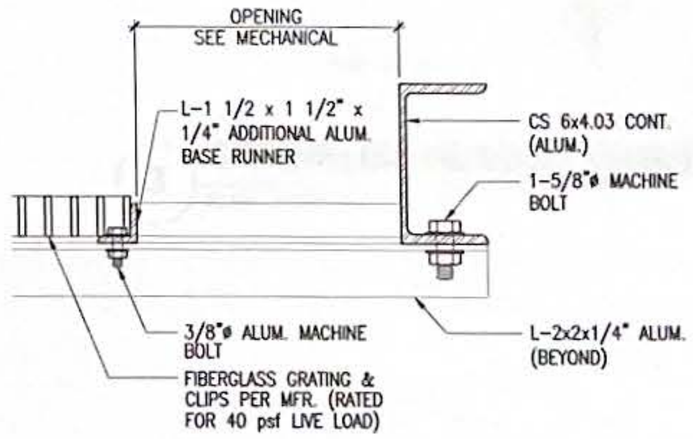

11 SECTION
SCALE: 3" = 1'-0"

GRAPHIC SCALE
SCALE: 3/4"=1'-0"
SCALE: 3"=1'-0"
SCALE: 1"=1'-0"

REVISIONS		
No.	Description	Date

RMT ENGINEERS, LLC
MECHANICAL AND FIRE PROTECTION ENGINEERING SERVICES
CONSTRUCTION MANAGEMENT SERVICES
P.O. BOX 6653, TAMUNING, GUAM 96931
TEL. (671) 969 - 0768
Email: admin@rmtengineers.com

I HEREBY CERTIFY THAT THIS PLAN WAS PREPARED BY ME OR UNDER MY DIRECT SUPERVISION
DATE: 10/28/2024

N.C. MACARIO & ASSOCIATES, INC.
P.O. Box 784 Hagatna, Guam 96932
Tel. 646-0947/48 Fax: 646-0901
Email: office@ncmacario.com

Project:
GMH URGENT CARE HVAC IMPROVEMENTS
GUAM MEMORIAL HOSPITAL TAMUNING, GUAM

Title:
DETAILS

FINAL SUBMITTAL

Designed:	JFD / NCM
Drawn:	KS
Checked:	JMC
Supv:	NCM
Scale:	AS SHOWN
Date:	10/25/24
Project No. 61K2112	AutoCAD File GMH URGENT CARE
Drawing No.	S3.2
Sheet No. 14 of 30	

GENERAL NOTES:

1. VERIFY EXIST'G SITE CONDITIONS AND REFLECT IN THE REQUIRED INSTALLATION SHOP DRWGS.
2. ALL WORK SHALL BE IN ACCORDANCE WITH 2009 INTERNATIONAL BUILDING CODE, THE 2009 INTERNATIONAL FIRE CODE, NFPA 13, AND OSHA SAFETY REGULATIONS.
3. BUILDING SPRINKLER SYSTEM WILL BE ACTIVE IN THE ENTIRE CONSTRUCTION. FREEZE SUB-MAINS OR BRANCH LINES WHEN MODIFYING SPRINKLER PIPING. COORDINATE WITH GMH FACILITIES MAINTENANCE BEFORE COMMENCING.
4. VERIFY EXISTING SPRINKLER PIPING, PIPE SIZES, POINTS OF CONNECTIONS PRIOR TO PREPARATION OF INSTALLATION SHOP DWGS.
5. ENSURE THAT MATERIALS ARE AVAILABLE IN THE ISLAND BEFORE STARTING ANY REMOVAL WORK.
6. THESE DRAWINGS ARE PRELIMINARY, FOR BUILDING PERMIT APPLICATION ONLY.
7. CONTRACTOR TO SUBMIT INSTALLATION SHOP DRAWINGS FOR APPROVAL BY THE FIRE DEPARTMENT BEFORE STARTING ANY SPRINKLER WORK. INSTALLATION SHOP DWGS SHALL BE PREPARED BY OR UNDER THE SUPERVISION OF A GUAM REGISTERED FIRE PROTECTION ENGINEER.
8. AFTER ACCEPTANCE OF THE INSTALLATION, SUBMIT AS-BUILT DRAWINGS.
9. PERFORM ALL WORK ACCORDING TO PHASING PLAN AND SHALL BE DONE PHASE BY PHASE.

SUMMARY OF WORK:

1. REMOVE EXISTING FIRE SPRINKLER SYSTEM MATERIALS SUCH AS SPRINKLER HEADS, FLEXIBLE CONNECTION, MOUNTING BRACKETS, ETC.
2. RE-INSTALL SPRINKLER HEADS AND APPURTENANCES. ADDITIONAL SPRINKLER HEADS SHALL BE PROVIDED AS NECESSARY TO PROVIDE PROPER SPRINKLER COVERAGE AND TO SUIT AREA'S NEW CEILING. CONTRACTOR SHALL REPLACE THE MATERIALS THAT ARE DAMAGED DURING CONSTRUCTION.
3. EXISTING PIPE SIZES SHALL BE VERIFIED AND UPGRADED AS NECESSARY UPON ADDITION OF SPRINKLER HEADS.
4. REROUTE EXISTING SPRINKLER LINES WHERE NECESSARY TO CLEAR NEW DUCTS AND CEILINGS.

LEGEND

SYMBOL	ABBREV.	DESCRIPTION
		PIPE ELBOW, DN
		PIPE ELBOW, UP
		PIPE TEE, DN
		PIPE RISER UP/DN & SS FLEXIBLE SPKR CONNECTION
		SPKR HEAD, PENDENT TYPE
		SPKR HEAD, SIDEWALL TYPE

ABBREV	DESCRIPTION
DN	DOWN
(E)	EXISTING
EXIST'G	EXISTING
FSC	FLEXIBLE SPKR CONN.
FT	FEET
NFPA	NATIONAL FIRE PROTECTION ASSOCIATION
(N)	NEW
POC	POINT OF CONNECTION
PSIG	POUNDS PER SQUARE INCH GAUGE
SPKR	SPRINKLER
SS	STAINLESS STEEL
TYP	TYPICAL

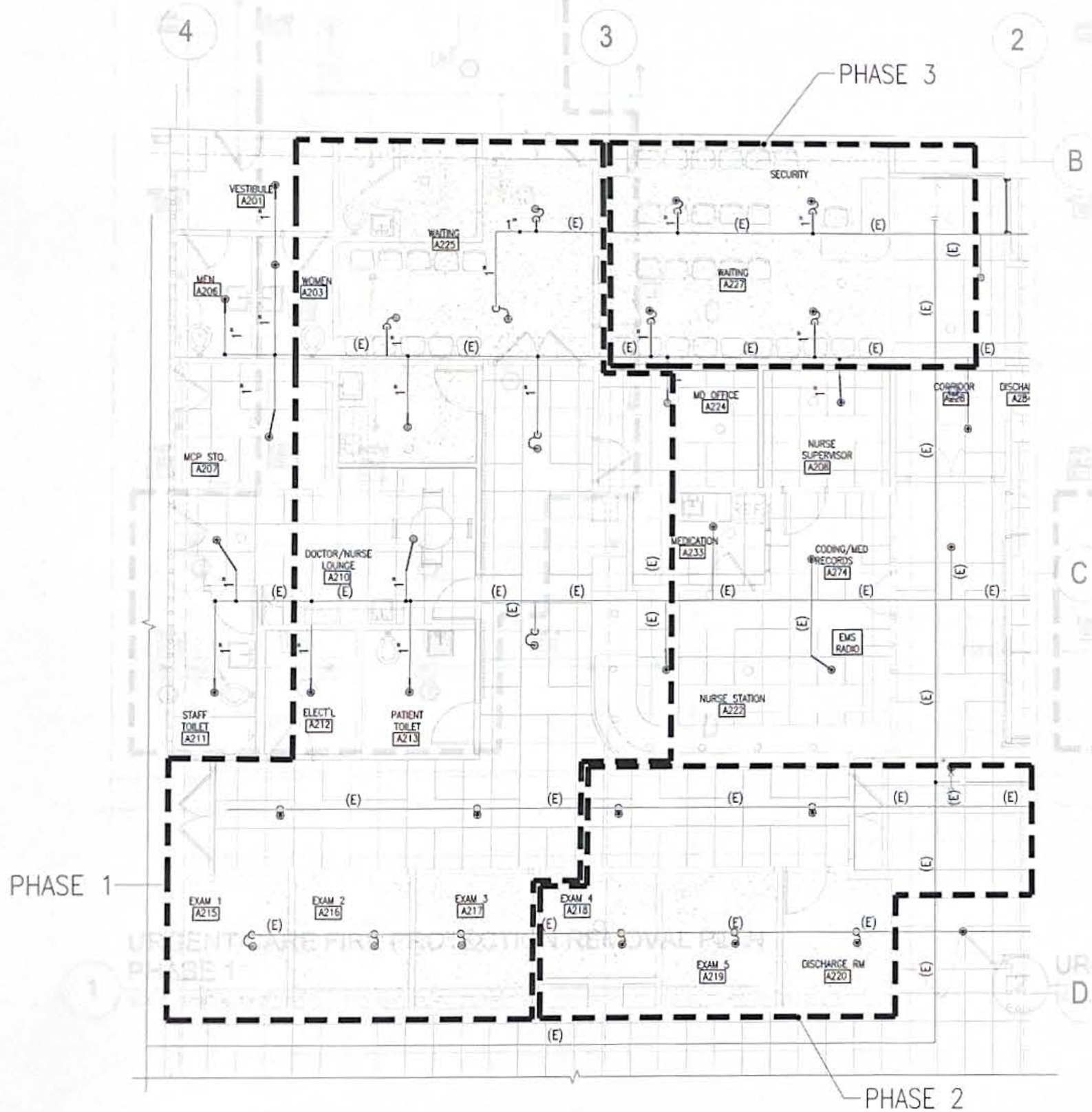

1 URGENT CARE FIRE PROTECTION PHASING PLAN
SCALE: 3/16" = 1'-0"

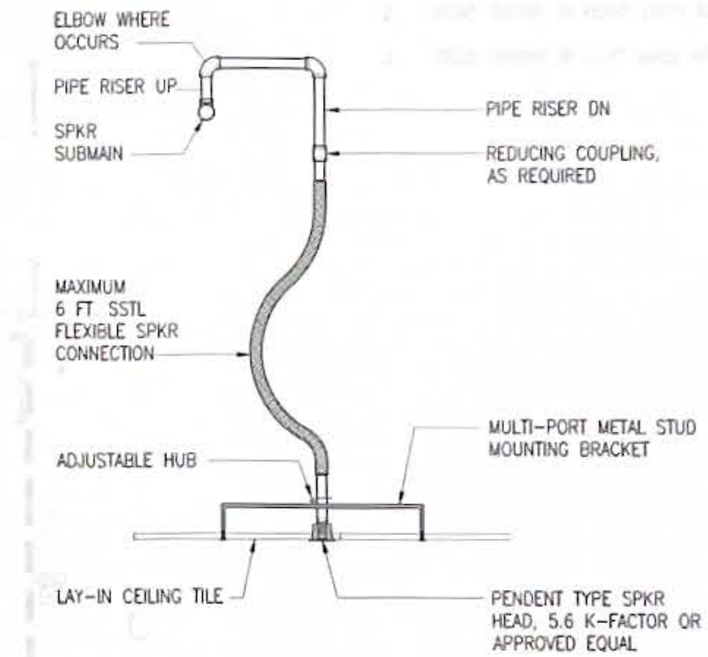

2 SPRINKLER HEAD AT LAY-IN CEILING DETAIL
SCALE: NONE

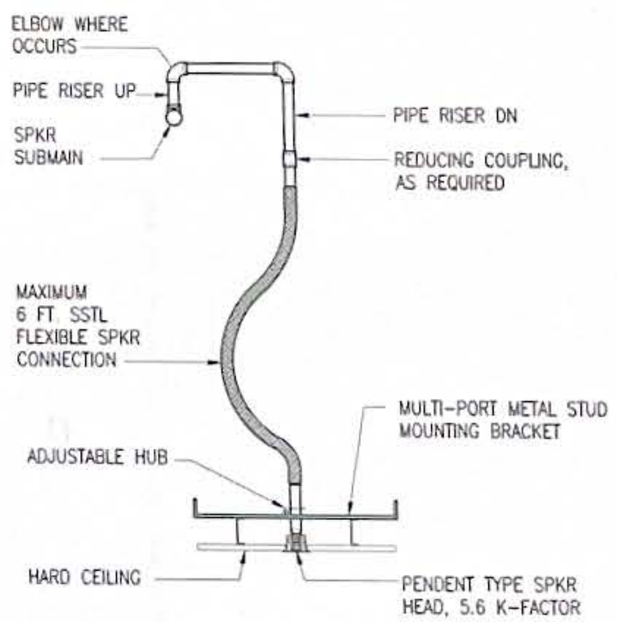

3 SPRINKLER HEAD AT HARD CEILING DETAIL
SCALE: NONE

SCALE: 3/16" = 1'-0"

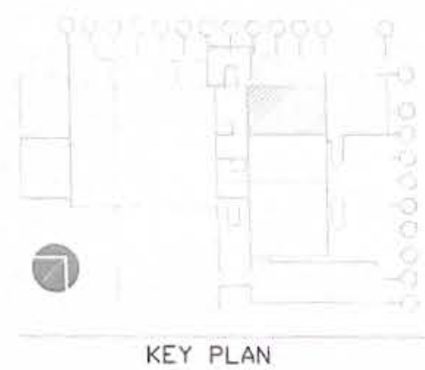

KEY PLAN

REVISIONS		
No.	Description	Date

RMT ENGINEERS, LLC
MECHANICAL AND FIRE PROTECTION ENGINEERING SERVICES
CONSTRUCTION MANAGEMENT SERVICES
P.O. BOX 8853, TAMUNING, GUAM 96931
TEL. (671) 969 - 0768
Email: admin@rmtengineers.com

RAUL M. TIO CERTIFICATE NO. 2118 (FIRE PROTECTION) EXP. 04/30/25 G.V.A.M. PROFESSIONAL ENGINEER

I HEREBY CERTIFY THAT THIS PLAN WAS PREPARED BY ME OR UNDER MY DIRECT SUPERVISION.

DATE: 10-22-24

Project:

GMH URGENT CARE HVAC IMPROVEMENTS

GUAM MEMORIAL HOSPITAL TAMUNING, GUAM

Title: URGENT CARE FIRE PROTECTION PHASING PLAN, GENERAL NOTES, SUMMARY OF WORK, LEGEND, SPRINKLER HEAD AT LAY-IN CEILING DETAIL, & SPRINKLER HEAD AT HARD CEILING DETAIL

FINAL SUBMITTAL

Designed:	RMT
Drawn:	AI
Checked:	RMT
Supv:	RMT
Scale:	AS SHOWN
Date:	10/25/2024
Project No. 61K2112	AutoCAD File GMH URGENT CARE

Drawing No.

FP1.1

Sheet No. 15 of 30

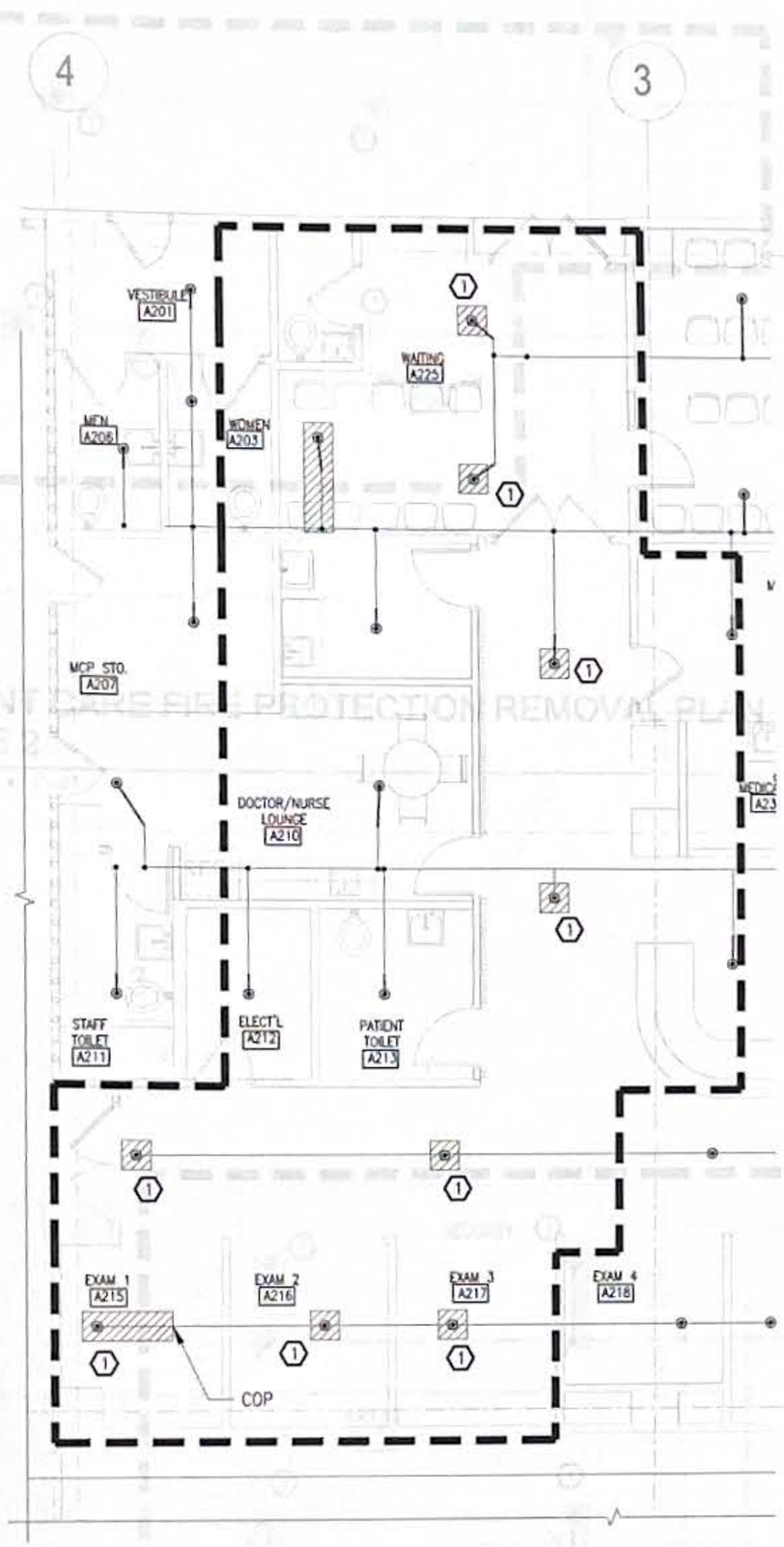

URGENT CARE FIRE PROTECTION REMOVAL PLAN PHASE 1

1 SCALE: 3/16" = 1'-0"

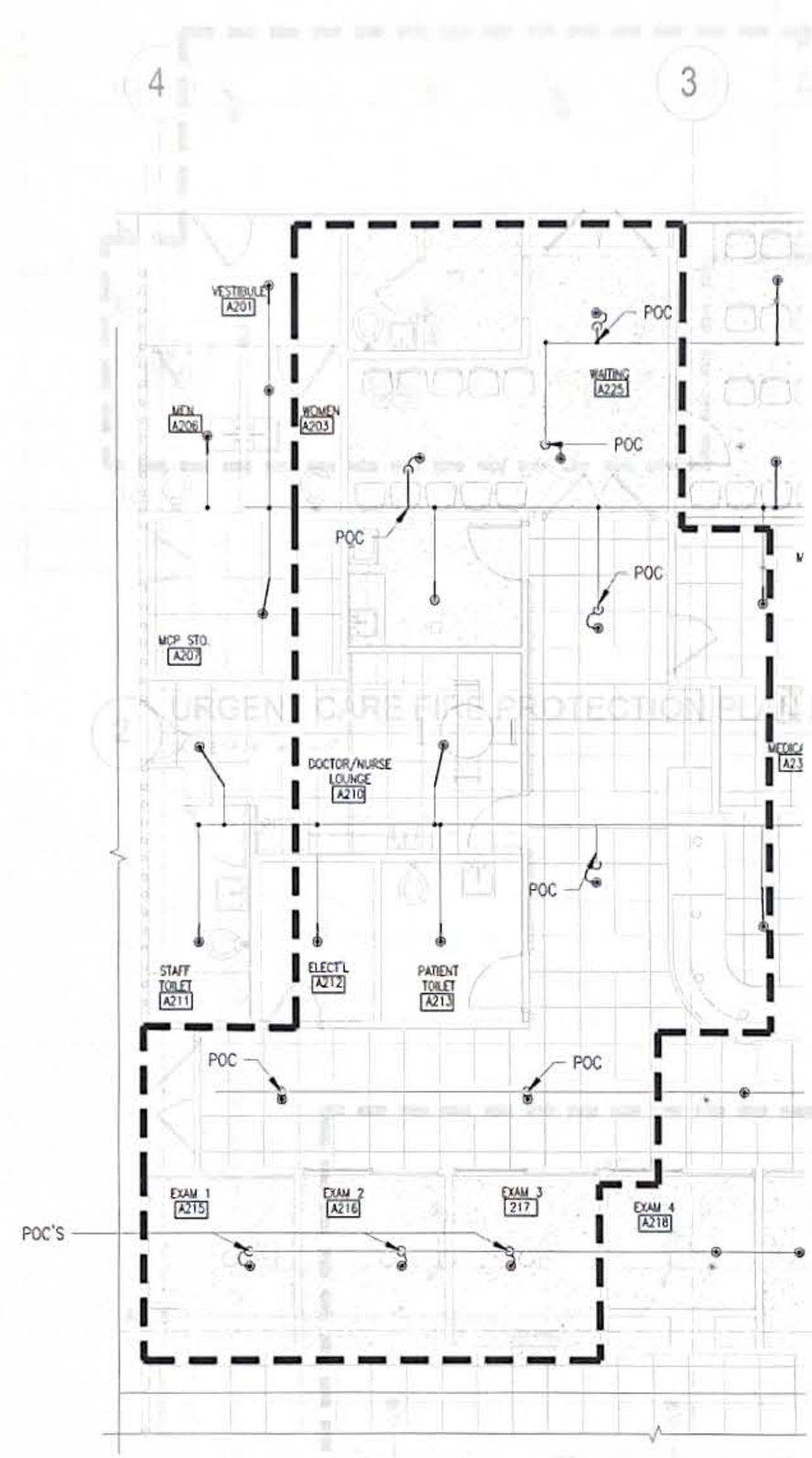

URGENT CARE FIRE PROTECTION PLAN PHASE 1

2 SCALE: 3/16" = 1'-0"

SCALE: 0 1' 5' 10' 3/16" = 1'-0"

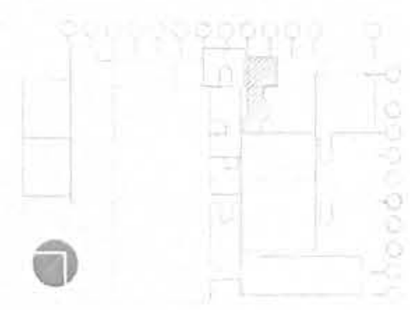

KEY PLAN

KEYED NOTES:

1. EXISTING SPRINKLER HEADS AND APPURTENANCES TO BE REMOVED AND RE-INSTALLED.

NOTES:

1. ITEMS SHOWN WITH HATCH LINES SHALL BE REMOVED.
2. ITEMS SHOWN IN HEAVY LINES ARE NEW,
3. ITEMS SHOWN IN LIGHT LINES ARE EXISTING.

REVISIONS		
No.	Description	Date

RMT ENGINEERS, LLC
MECHANICAL AND FIRE PROTECTION ENGINEERING SERVICES
CONSTRUCTION MANAGEMENT SERVICES
P.O. BOX 6853, TAMUNING, GUAM 96931
TEL. (671) 969 - 0768
Email: admin@rmtengineers.com

RAUL M. TIO CERTIFICATE NO. 2116 (FIRE PROTECTION) EXP. 04/30/05 GUAM PROFESSIONAL ENGINEER

I HEREBY CERTIFY THAT THIS PLAN WAS PREPARED BY ME OR UNDER MY DIRECT SUPERVISION

DATE 10-25-24

Project:

GMH URGENT CARE HVAC IMPROVEMENTS

GUAM MEMORIAL HOSPITAL
TAMUNING, GUAM

Title:

URGENT CARE FIRE PROTECTION REMOVAL PLAN, URGENT CARE FIRE PROTECTION PLAN – PHASE 1, KEYED NOTES & NOTES

FINAL SUBMITTAL

Designed:	RMT
Drawn:	AI
Checked:	RMT
Supv:	RMT
Scale:	AS SHOWN
Date:	10/25/2024
Project No. 61K2112	AutoCAD File GMH URGENT CARE

Drawing No.

FP1.2

Sheet No. 16 of 30

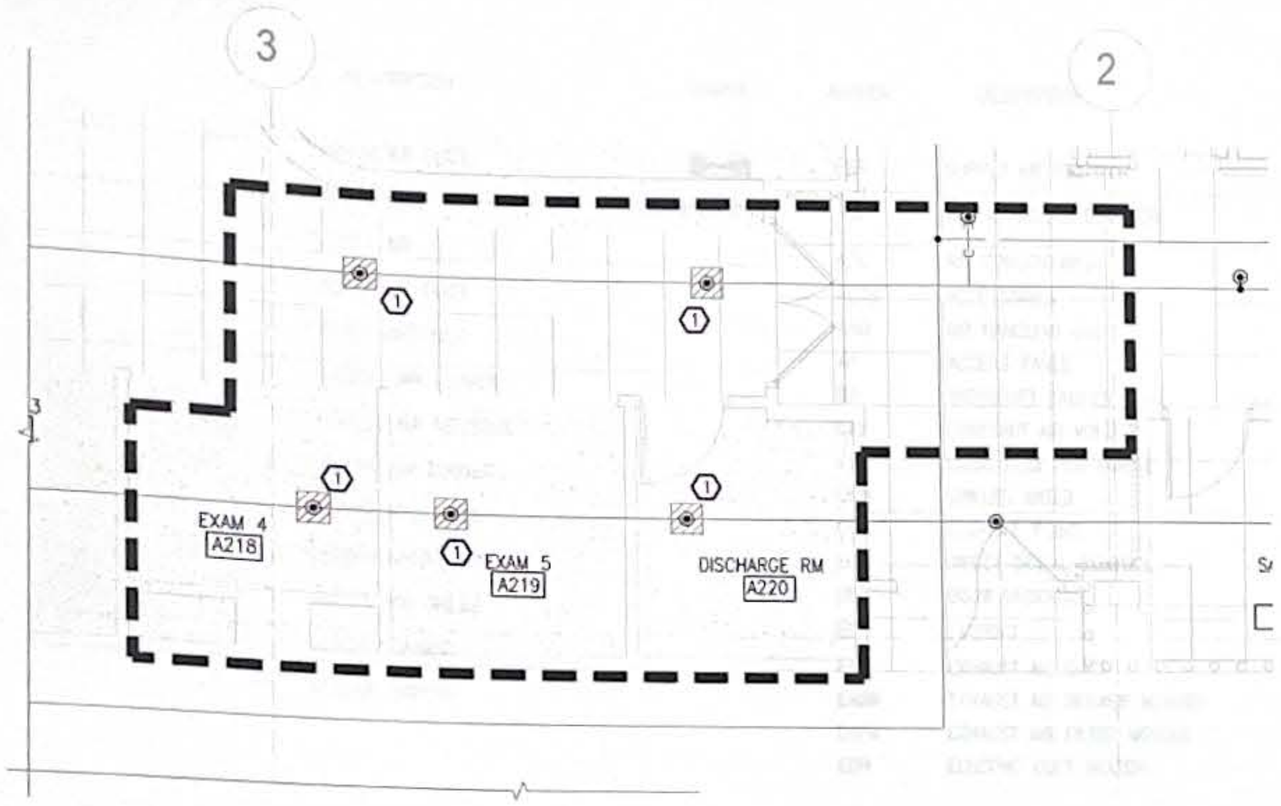

1 URGENT CARE FIRE PROTECTION REMOVAL PLAN PHASE 2
SCALE: 1/4" = 1'-0"

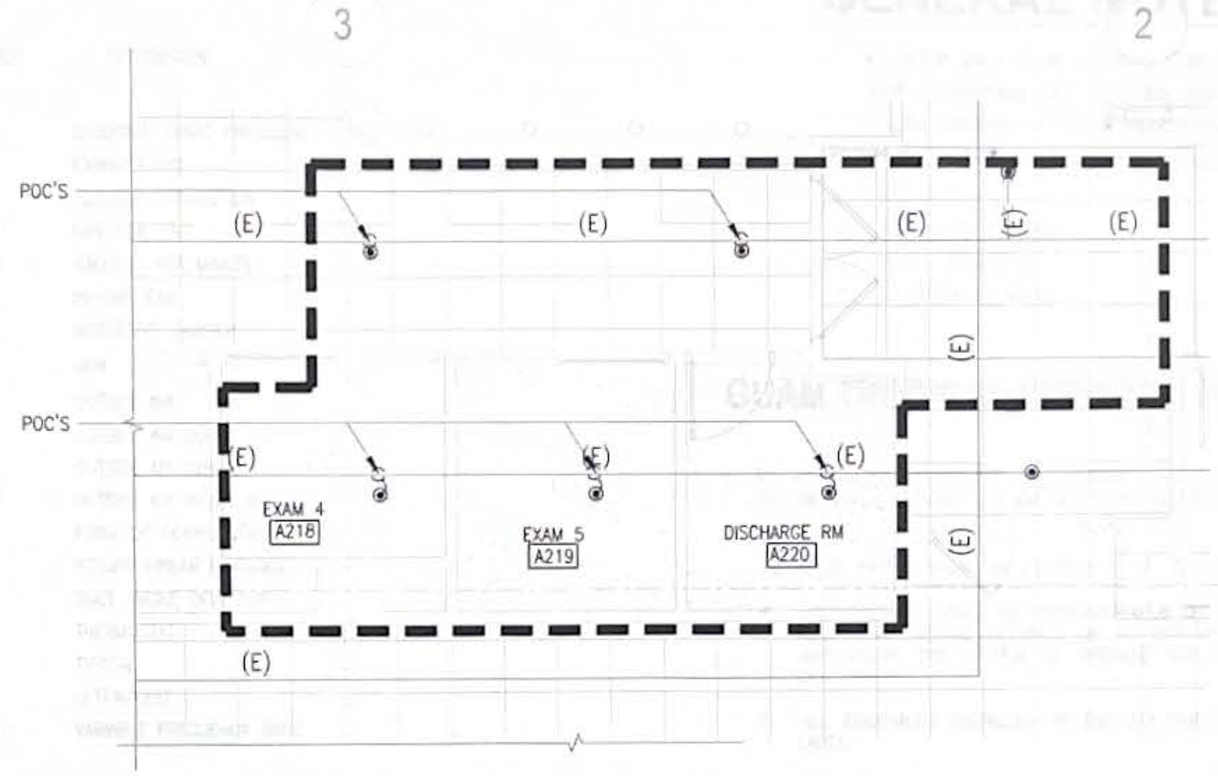

2 URGENT CARE FIRE PROTECTION PLAN PHASE 2
SCALE: 1/4" = 1'-0"

KEYED NOTES:

1. EXISTING SPRINKLER HEADS AND APPURTENANCES TO BE REMOVED AND RE-INSTALLED.

NOTES:

1. ITEMS SHOWN WITH HATCH LINES SHALL BE REMOVED.
2. ITEMS SHOWN IN HEAVY LINES ARE NEW.
3. ITEMS SHOWN IN LIGHT LINES ARE EXISTING.

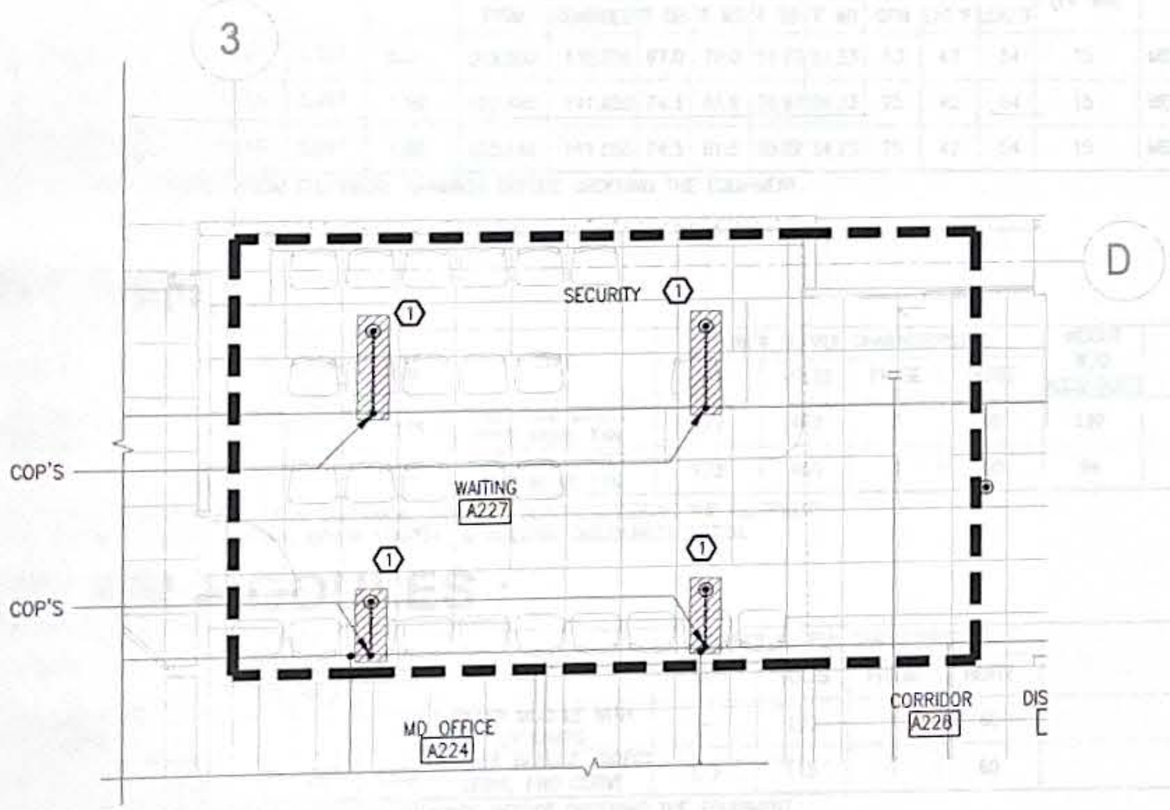

3 URGENT CARE FIRE PROTECTION REMOVAL PLAN PHASE 3
SCALE: 1/4" = 1'-0"

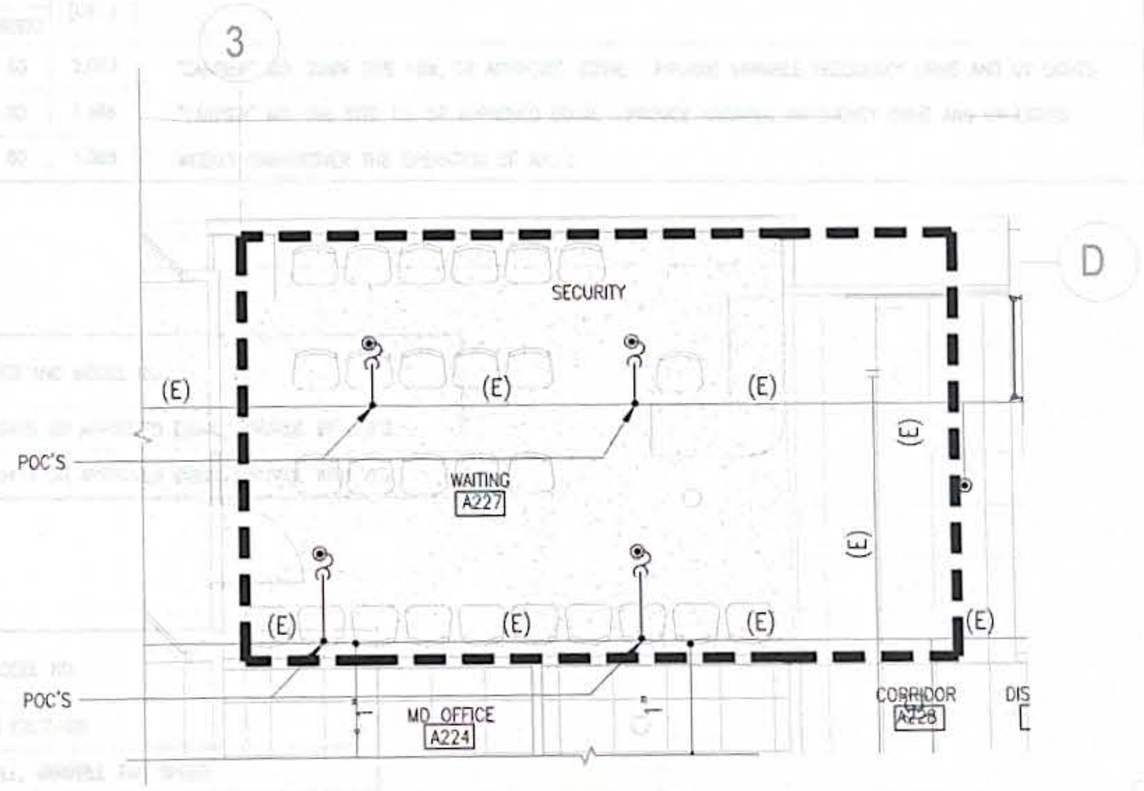

4 URGENT CARE FIRE PROTECTION PLAN PHASE 3
SCALE: 1/4" = 1'-0"

0 1' 2' 4' 6' 8'
SCALE: ¼ = 1'-0"

KEY PLAN

REVISIONS		
No.	Description	Date

RMT ENGINEERS, LLC
MECHANICAL AND FIRE PROTECTION ENGINEERING SERVICES
CONSTRUCTION MANAGEMENT SERVICES
P.O. BOX 6853, TAMUNING, GUAM 96931
TEL: (671) 969 - 0788
Email: admin@rmtengineers.com

RAMIL M. TIO
CERTIFICATE
(FIRE PROTECTION)
EXP. 04/30/25
GUAM
PROFESSIONAL ENGINEER

I HEREBY CERTIFY THAT THIS PLAN WAS PREPARED BY ME OR UNDER MY DIRECT SUPERVISION

DATE: 10-27-24

Project:
GMH URGENT CARE HVAC IMPROVEMENTS
GUAM MEMORIAL HOSPITAL TAMUNING, GUAM

Title:
URGENT CARE FIRE PROTECTION REMOVAL PLAN, URGENT CARE FIRE PROTECTION PLAN – PHASE 2 & 3, KEYED NOTES & NOTES
FINAL SUBMITTAL

Designed:	RMT
Drawn:	AI
Checked:	RMT
Supv:	RMT
Scale:	AS SHOWN
Date:	10/25/2024
Project No. 61K2112	AutoCAD File GMH URGENT CARE

Drawing No.
FP1.3

Sheet No. 17 of 30

LEGEND

SYMBOL	ABBREV	DESCRIPTION
	RA	RETURN AIR DUCT
	RA	RETURN AIR
	SA	SUPPLY AIR
	SAD	SUPPLY AIR DUCT
	CD	CEILING DIFFUSER
	EAL	EXHAUST AIR LOUVER
	EAR	EXHAUST AIR REGISTER
	OAL	OUTSIDE AIR LOUVER
	RAG	RETURN AIR GRILLE
	RLG	RETURN LINEAR GRILLE
	SAG	SUPPLY AIR GRILLE
	TV	TURNING VANES
	VD	VOLUME DAMPER

SYMBOL	ABBREV	DESCRIPTION
	SAR	SUPPLY AIR REGISTER
	SLD	SUPPLY LINEAR DIFFUSER
	A/C	AIR CONDITIONING
	ACCS	ACCESSORIES
	AHU	AIR HANDLING UNIT
	AP	ACCESS PANEL
	BD	BACKDRAFT DAMPER
	CAV	CONSTANT AIR VOLUME
	CFM	CUBIC FEET PER MINUTE
	CHW	CHILLED WATER
	COP	CUT-OFF POINT
	DDC	DIRECT DIGITAL CONTROL
	DUC	DOOR UNDERCUT
	(E)	EXISTING
	EAD	EXHAUST AIR DUCT
	EABM	EXHAUST AIR BLOWER MODULE
	EAFM	EXHAUST AIR FILTER MODULE
	EDH	ELECTRIC DUCT HEATER

ABBREV.	DESCRIPTION
ESP	EXTERNAL STATIC PRESSURE
EF	EXHAUST FAN
FC	FLEXIBLE CONNECTION
FCU	FAN COIL UNIT
GPM	GALLONS PER MINUTE
ILF	IN-LINE FAN
MD	MOTORIZED DAMPER
(N)	NEW
OA	OUTSIDE AIR
OAD	OUTSIDE AIR DUCT
OAI	OUTSIDE AIR INTAKE
OAIG	OUTSIDE AIR INTAKE GRILLE
POC	POINT OF CONNECTION
RLD	RETURN LINEAR DIFFUSER
SD	DUCT SMOKE DETECTOR
T	THERMOSTAT
TYP	TYPICAL
UV	ULTRAVIOLET
VFD	VARIABLE FREQUENCY DRIVE

GENERAL NOTES:

1. ALL WORK SHALL BE IN ACCORDANCE WITH 2009 INTERNATIONAL BUILDING CODE, THE 2009 INTERNATIONAL FIRE CODE, THE 2009 INTERNATIONAL MECHANICAL CODE, NFPA 96, SMACNA STANDARDS FOR LOW VELOCITY DUCTWORK, & OSHA SAFETY REGULATIONS.
2. FOLLOW CURRENT COVID RESTRICTIONS IMPOSED BY THE CDC AND/OR THE FACILITY SUCH AS:
   - A. WEARING OF FACEMASK
   - B. SOCIAL DISTANCING
   - C. SANITATION OF HANDS

GUAM TROPICAL ENERGY CODE (MECHANICAL)

1. ALL MECHANICAL EQUIPMENT AND SYSTEMS SHALL COMPLY WITH THE MANDATORY PROVISIONS OF CHAPTER 5 (VENTILATION AND AIR CONDITIONING) OF THE 2017 GUAM TROPICAL ENERGY CODE.
   - A. EACH SYSTEM SHALL BE CONTROLLED BY A THERMOSTAT
   - B. THERMOSTATS SHALL BE PROGRAMMABLE TYPE WITH CAPABILITY TO AUTOMATICALLY SET BACK TEMPERATURE SETTINGS UP TO 85°F FOR A 7-DAY SCHEDULE. INCLUDE OVERRIDE AND ALLOW THE SYSTEM TO OPERATE FOR UP TO 2-HOURS USING MANUAL TIMER OR OCCUPANCY.
   - C. ALL EQUIPMENT INSTALLED IN THE BUILDING SHALL HAVE THE U.S. DOE ENERGY GUIDE LABEL.
   - D. REFRIGERANT SUCTION PIPING SHALL BE INSULATED WITH 1/2" THICK MINIMUM CELLULAR FOAM, CELLULAR GLASS, OR FIBERGLASS INSULATION; EXTERIOR EXPOSED INSULATION SHALL BE JACKETED WITH SSTL OR ALUMINUM OR PLASTIC COVER.
   - E. EQUIPMENT SHALL MEET THE EFFICIENCY REQUIREMENTS OF TABLE 503.2. FOR SPLIT SYSTEM LESS THAN 65,000 BTU/H THE MINIMUM EFFICIENCY SHALL BE 13 SEER.

EQUIPMENT SCHEDULE
AIR HANDLING UNITS (AHU'S):

MARK	AREA SERVED	SUPPLY AIR (CFM)	OUTSIDE AIR (CFM)	ESP (IN. WG.)	MAIN COOLING COIL: COOLING CAPACITY (BTU/HR.) TOTAL	SENSIBLE	ENT. AIR TEMP. °F DB	°F WB	LEAV. AIR TEMP. °F DB	°F WB	CHILLED WATER DATA GPM	ENT.°F	LEAV.°F	COOLING COIL WATER PRESSURE DROP (FT. WG)	FILTER	FAN MOTOR HP	FLA	POWER SUPPLY CHARACTERISTICS VOLTS	PHASE	HERTZ	OPE-RATING WT. (LBS.)	REMARKS
DOAS-UC	AHU#1/AHU#1A	3,557	3,557	0.5	319,050	132,650	87.0	79.0	51.23	51.23	53	42	54	15	MERV 8	5.0	6.6	460	3	60	2,083	"CARRIER" MO. 39MW SIZE 10W, OR APPROVED EQUAL. PROVIDE VARIABLE FREQUENCY DRIVE AND UV LIGHTS.
AHU#1	URGENT CARE	7,210	3,557	1.50	150,140	141,650	74.3	61.6	55.97	54.23	25	42	54	15	MERV 14	7.5	9.4	460	3	60	1,388	"CARRIER" MO. 39L SIZE 15, OR APPROVED EQUAL. PROVIDE VARIABLE FREQUENCY DRIVE AND UV LIGHTS.
AHU#1A	STAND-BY/BACKUP FOR URGENT CARE	7,210	3,557	1.50	150,140	141,650	74.3	61.6	55.97	54.23	25	42	54	15	MERV 14	7.5	9.4	460	3	60	1,388	WEEKLY CHANGEOVER THE OPERATION OF AHU'S.

NOTE: VERIFY POWER SUPPLY CHARACTERISTICS FROM ELECTRICAL DRAWINGS BEFORE ORDERING THE EQUIPMENT.

EXHAUST FAN :

MARK	AREA SERVED	CFM	STATIC PRESSURE (IN. WG.)	FAN RPM	TYPE	POWER SUPPLY CHARACTERISTICS HP	VOLTS	PHASE	HERTZ	WEIGHT W/O ACCS (LBS)	MANUFACTURER AND MODEL NO.
ILF#1	EXAM RMS, DISCHARGE RM, CORRIDOR	2,790	0.3	1,674	TUBE AXIAL DIRECT DRIVE INLINE FAN	1/2	460	3	60	139	"GREENHECK" MO: AX-47-160-0415 OR APPROVED EQUAL. PROVIDE WITH VFD.
ILF#2	ED WAITING	620	0.25	1,770	TUBE AXIAL DIRECT DRIVE INLINE FAN	1/3	460	3	60	94	"GREENHECK" MO: AX-47-160-0414 OR APPROVED EQUAL. PROVIDE WITH VFD.

NOTE: 1. VERIFY POWER SUPPLY CHARACTERISTICS FROM ELECTRICAL DRAWINGS BEFORE ORDERING THE EQUIPMENT.
2. COMPLETE WITH BACKDRAFT DAMPER, MANUAL MOTOR STARTER, & INTEGRAL DISCONNECT SWITCH.

EXHAUST AIR MODULES :

MARK	AREA SERVED	CFM	STATIC PRESSURE (IN. WG.)	FAN RPM	TYPE	POWER SUPPLY CHARACTERISTICS HP	VOLTS	PHASE	HERTZ	MANUFACTURER AND MODEL NO.
EAFM	EXAM RMS, DISCHARGE RM, CORRIDOR, WAITING	–	–	–	FILTER MODULE WITH UV LAMPS	–	120	1	60	"RGF" MICROCON EXC7-UV
EABM	EXAM RMS, DISCHARGE RM	100-1350+	.0"-1.36"	1360	BLOWER MODULE, DIRECT DRIVE, FWD CURVE	1/3	115	1	60	"RGF" ECOPHAN BLOWER MODULE, VARIABLE FAN SPEED

NOTE: VERIFY POWER SUPPLY CHARACTERISTICS FROM ELECTRICAL DRAWINGS BEFORE ORDERING THE EQUIPMENT.

ELECTRIC DUCT HEATER:

MARK	KW	STAGE	TYPE	POWER SUPPLY CHARACTERISTICS AMPS	MOCP	VOLTS	PHASE	HERTZ	MANUFACTURER AND MODEL NO.
EDH	6.8	1	SLIP IN ELECTRIC DUCT HEATER	18.9	25	208	8	60	"TUTCO" E-SERIES DH

NOTE: VERIFY POWER SUPPLY CHARACTERISTICS FROM ELECTRICAL DRAWINGS BEFORE ORDERING THE EQUIPMENT.

URGENT CARE EXISTING A/C & VENTILATION PLAN

REVISIONS		
No.	Description	Date

RMT ENGINEERS, LLC
MECHANICAL AND FIRE PROTECTION ENGINEERING SERVICES
CONSTRUCTION MANAGEMENT SERVICES
P.O. BOX 6853, TAMUNING, GUAM 96931
TEL: (671) 969 - 0768
Email: admin@rmtengineers.com

I HEREBY CERTIFY THAT THIS PLAN WAS PREPARED BY ME OR UNDER MY DIRECT SUPERVISION
DATE 10-23-24

Project:
GMH URGENT CARE HVAC IMPROVEMENTS
GUAM MEMORIAL HOSPITAL TAMUNING, GUAM

Title:
LEGEND, & EQUIPMENT SCHEDULE

FINAL SUBMITTAL

Designed:	RMT
Drawn:	AI
Checked:	RMT
Supv:	RMT
Scale:	AS SHOWN
Date:	10/25/2024
Project No. 61K2112	AutoCAD File GMH URGENT CARE

Drawing No.
M1.0
Sheet No. 18 of 30

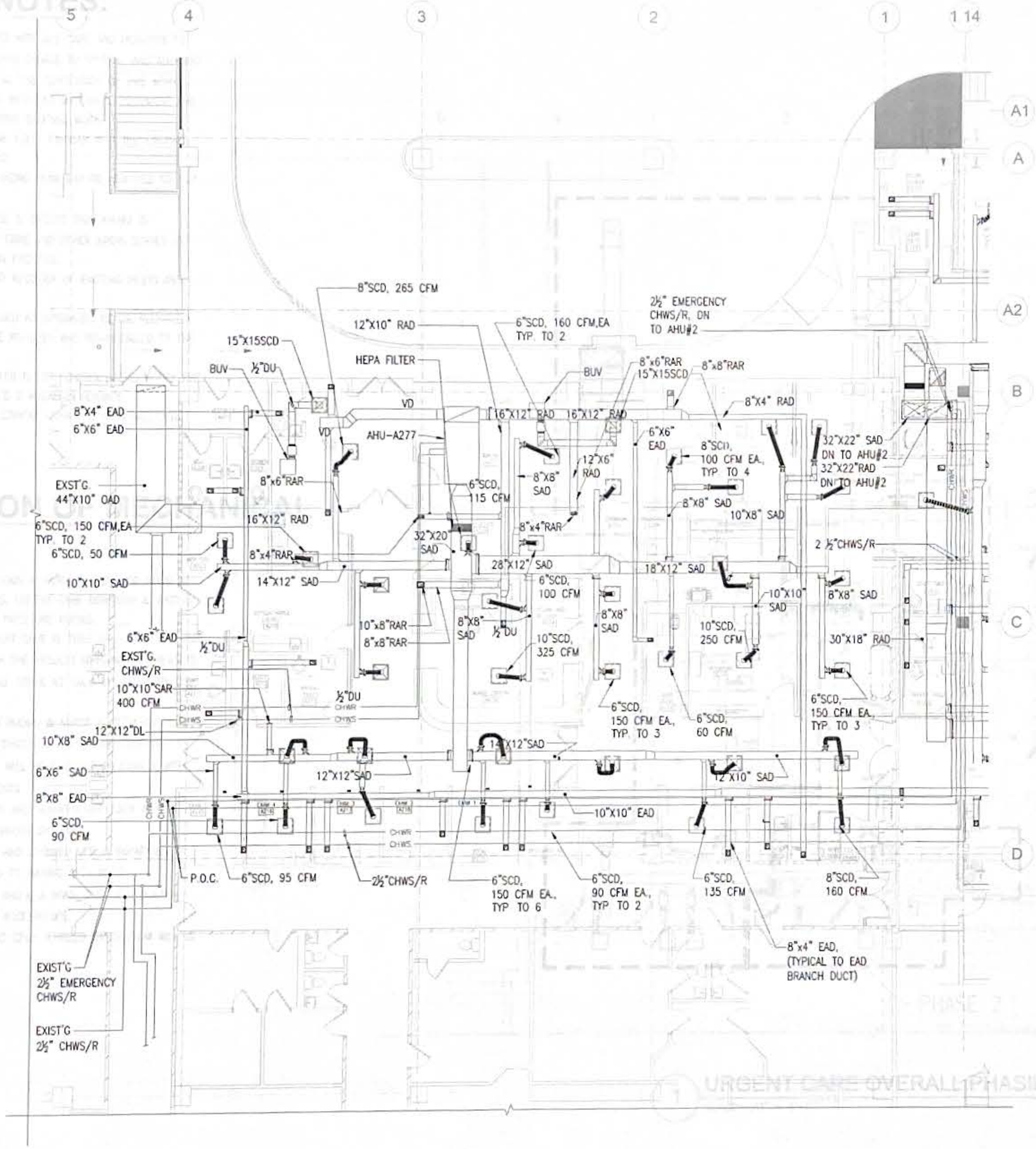

1 URGENT CARE EXISTING A/C & VENTILATION PLAN

SCALE: 1/8" = 1'-0"

NOTES:

1. THIS DRAWING IS FROM AVAILABLE RECORD FOR BALANCING REFERENCE ONLY.
2. CONTRACTOR TO VERIFY EXISTING SITE CONDITIONS.

SCALE: 0 1' 2' 4' 8' 15' ⅛" = 1'-0"

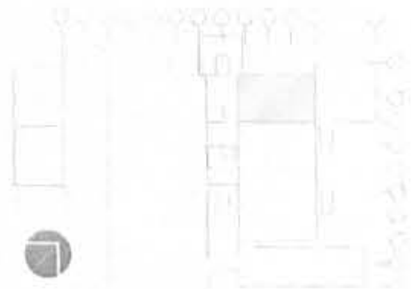

KEY PLAN

REVISIONS		
No.	Description	Date

RMT ENGINEERS, LLC
MECHANICAL AND FIRE PROTECTION ENGINEERING SERVICES
CONSTRUCTION MANAGEMENT SERVICES
P.O. BOX 6853, TAMUNING, GUAM 96931
TEL. (671) 569 - 0768
Email: admin@rmtengineers.com

I HEREBY CERTIFY THAT THIS PLAN WAS PREPARED BY ME OR UNDER MY DIRECT SUPERVISION

DATE: _____

Project:

GMH URGENT CARE HVAC IMPROVEMENTS

GUAM MEMORIAL HOSPITAL TAMUNING, GUAM

Title:

URGENT CARE EXISTING A/C & VENTILATION PLAN, AND NOTES

FINAL SUBMITTAL

Designed:	RMT
Drawn:	AI
Checked:	RMT
Supv:	RMT
Scale:	AS SHOWN
Date:	10/25/2024
Project No. 61K2112	AutoCAD File GMH URGENT CARE

Drawing No.

M2.1

Sheet No. 19 of 30

CONSTRUCTION NOTES:

1. REMOVAL AND NEW WORK SHALL BE PERFORMED WITH DUE CARE AND DILIGENCE TO PREVENT THE UNNECESSARY DESTRUCTION AND/OR DAMAGE TO SYSTEMS AND ADJACENT SPACE THAT SHALL REMAIN IN THE OPERATION AT THE CONCLUSION OF THIS WORK.
2. VERIFY EXISTING CONDITIONS AND ENSURE THAT REQUIRED MATERIALS, EQUIPMENT AND APPURTENANCES ARE ON ISLAND BEFORE STARTING REMOVAL WORK.
3. CONTRACTOR TO VISIT THE JOBSITE AND BECOME FULLY FAMILIAR WITH THE EXISTING CONDITIONS OF THE PROJECT PRIOR TO BIDDING.
5. PERFORM ALL WORK BY PHASE. SUGGESTED PHASING PLAN MAY BE ADJUSTED TO SUIT THE PRESENT NEED OF GMH.
6. BEFORE STARTING ANY REMOVAL WORK IN PHASE 3, ENSURE THAT AHU#2 IS OPERATIONAL TO TEMPORARILY SUPPLY URGENT CARE AND OTHER AREAS SERVED BY AHU-A277 WHILE PHASE 3 CONSTRUCTION IS IN PROCESS.
7. TAKE AND RECORD CFM AT EACH DIFFUSER AND REGISTER OF EXISTING INLETS AND OUTLETS THAT SERVED BY AHU-A277.
8. EXISTING FIRE SPRINKLER SYSTEM MATERIALS SUCH AS SPRINKLER HEADS, FLEXIBLE CONNECTION, MOUNTING BRACKET, ETC. WILL BE RE-USED AND RE-INSTALLED TO THE NEW CEILING.
9. IF NECESSARY, PRIOR TO TURNING OFF SPRINKLER FLOOR CONTROL VALVE, NOTIFY FIRE DEPARTMENT AND FACILITIES MAINTENANCE OFFICE 2 WEEKS IN ADVANCE.
10. RELATED ARCHITECTURAL, STRUCTURAL, AND ELECTRICAL WORK ARE ALSO INCLUDED.

BRIEF DESCRIPTION OF MECHANICAL WORK:

1. THIS PROJECT IS TO CONVERT THE 5 EXAM ROOMS & NURSE SUPERVISOR ROOM AT URGENT CARE TO BE NEGATIVE CAPABLE ROOMS. URGENT CARE CORRIDOR & WAITING AREA IN ED WILL BE CONVERTED TO NEGATIVE PRESSURE ROOMS.
2. EXISTING AIR CONDITIONING OPERATION AT URGENT CARE IS THRU AHU-A277. THE UNIT WILL BE REPLACED BY AHU#1 TO COMPLY WITH THE PROJECT AIRFLOW REQUIREMENTS.
3. ADDITIONAL AHU#1A WILL BE PROVIDED AND WILL SERVE AS BACK UP/STAND-BY UNIT FOR URGENT CARE.
4. EXISTING EXHAUST AIR OPERATIONS OF 5 EXAM ROOMS & NURSE SUPERVISOR ROOM IS WITH EXIST'G RV#1. THE SAID ROOMS WILL BE DISCONNECTED TO THE EXISTING EXHAUST AIR SYSTEM AND NEW EXHAUST ILF#1 WILL BE PROVIDED TO COMPLY WITH AIRBORNE INFECTION ISOLATION (AII) REQUIREMENTS.
5. URGENT CARE CORRIDOR RAR WILL BE REMOVED AND BLANKED OFF. EAFM WILL BE PROVIDED AND WILL TAP TO THE NEW ILF#1 EXHAUST SYSTEM.
6. RAR IN WAITING AREA IN ED WILL BE REMOVED AND BLANKED OFF. A SEPARATE EXHAUST SYSTEM WITH ILF#2 WILL BE PROVIDED TO WAITING AREA IN ED.
7. EQUIPMENT WILL INCLUDE EAFM's, EABM's, TWO AHU's, A DOAS, TWO ILF's, DUCTING AND ACCESSORIES, CHILLED WATER PIPING AND ACCESSORIES.
8. COMPLETE AIR BALANCING FOR AHU'S, AND DOAS CFMS. CHILLED WATER FLOW WILL BE BALANCED AS WELL.

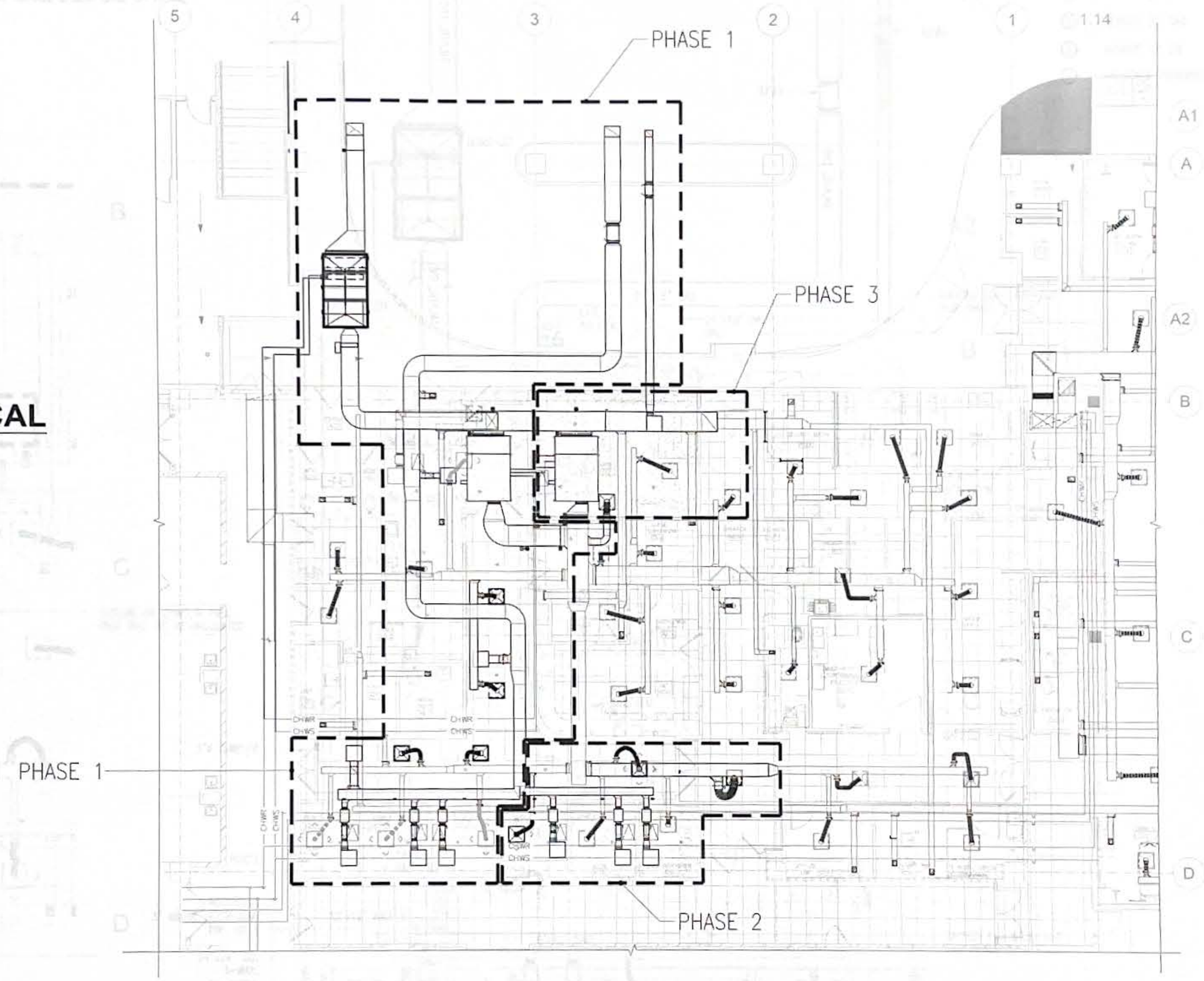

1 URGENT CARE OVERALL PHASING PLAN
SCALE: 1/8" = 1'-0"

SCALE: 0 1' 2' 4' 8' 15' — 1/8" = 1'-0"

KEY PLAN

REVISIONS		
No.	Description	Date

RMT ENGINEERS, LLC
MECHANICAL AND FIRE PROTECTION ENGINEERING SERVICES
CONSTRUCTION MANAGEMENT SERVICES
P.O. BOX 6853, TAMUNING, GUAM 96931
TEL. (671) 969 - 0768
Email: admin@rmtengineers.com

RAMIL M. TIO
CERTIFICATE
No 1084
(MECHANICAL)
EXP. 04/30/25
GUAM
PROFESSIONAL ENGINEER

10-25-24

I HEREBY CERTIFY THAT THIS PLAN WAS PREPARED BY ME OR UNDER MY DIRECT SUPERVISION

DATE: _____

Project:
GMH URGENT CARE HVAC IMPROVEMENTS
GUAM MEMORIAL HOSPITAL TAMUNING, GUAM

Title:
URGENT CARE OVERALL PHASING PLAN, CONSTRUCTION NOTES, & BRIEF DESCRIPTION OF MECHANICAL WORK
FINAL SUBMITTAL

Designed:	RMT
Drawn:	AI
Checked:	RMT
Supv:	RMT
Scale:	AS SHOWN
Date:	10/25/2024
Project No. 61K2112	AutoCAD File GMH URGENT CARE

Drawing No.
M2.2

Sheet No. 20 of 30

NOTES:

1. ITEMS SHOWN WITH HATCH LINES SHALL BE REMOVED.
2. ITEMS SHOWN IN HEAVY LINES ARE NEW.
3. ITEMS SHOWN IN LIGHT LINES ARE EXISTING.
4. ENCLOSED WITH BIRD NETTING THE SPACE ABOVE THE DOAS-UC, ABOVE ILF#1 & #2, & ABOVE THE DUCTING OUTSIDE URGENT CARE UP TO THE UNDERSLAB OF ABOVE FLOOR.

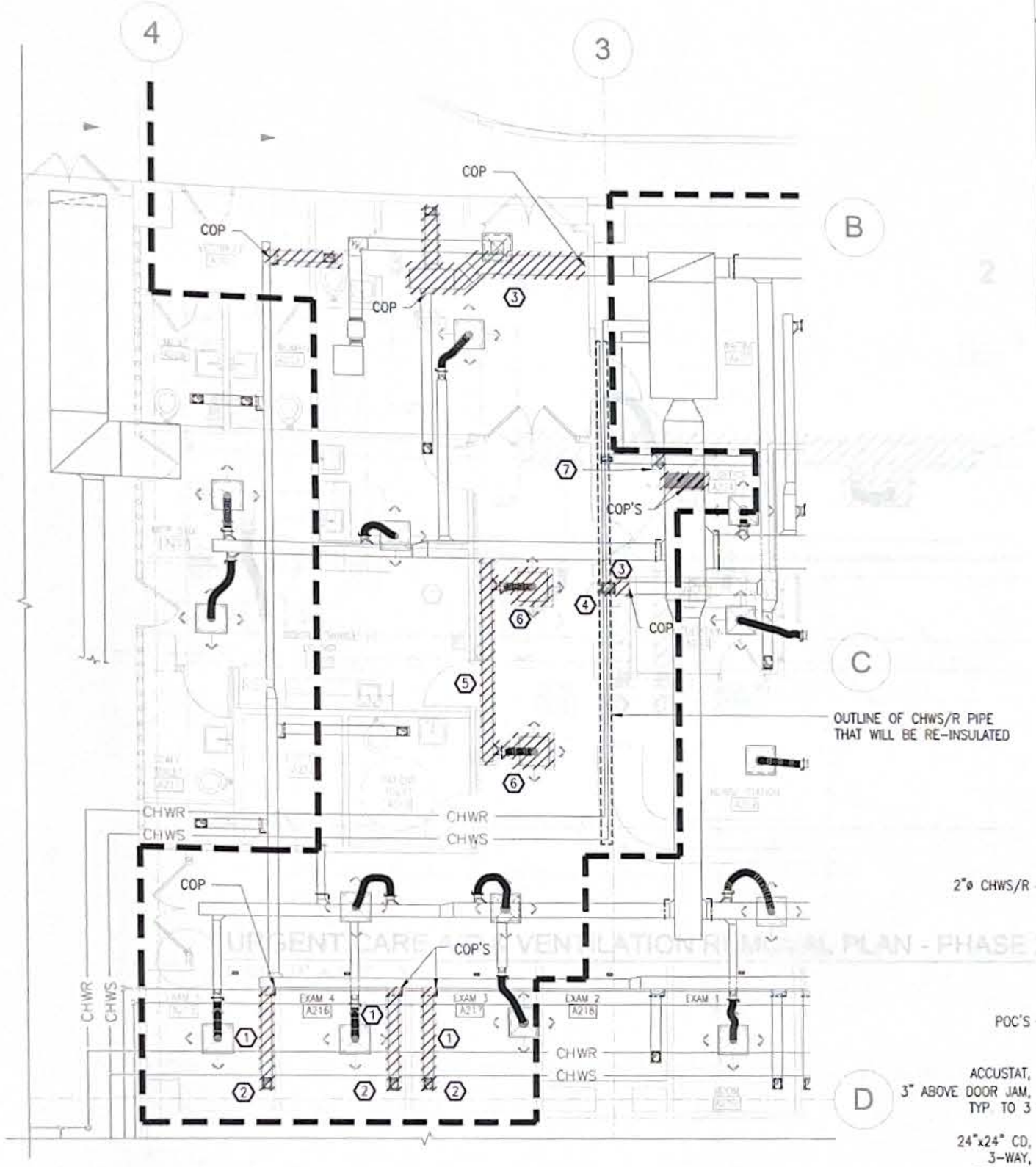

1 URGENT CARE A/C & VENTILATION REMOVAL PLAN - PHASE 1
SCALE: 3/16" = 1'-0"

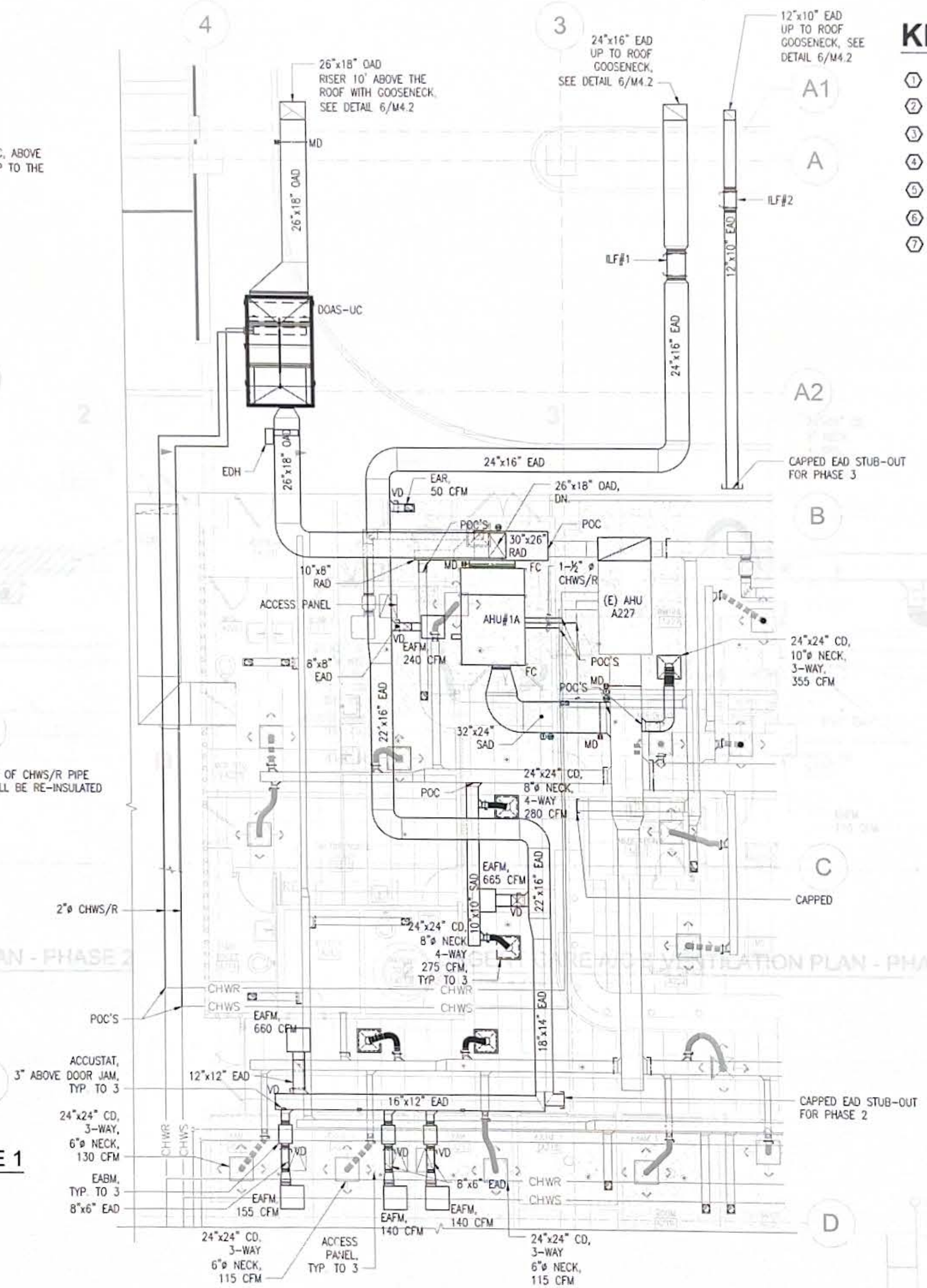

2 URGENT CARE A/C & VENTILATION PLAN - PHASE 1
SCALE: 3/16" = 1'-0"

SCALE: 3/16" = 1'-0"

KEYED NOTES:

1. REMOVE (E) EAD
2. REMOVE (E) EAR
3. REMOVE (E) RAD
4. REMOVE (E) RAR
5. REMOVE (E) SAD
6. REMOVE (E) CD
7. RELOCATE THERMOSTAT AND SMOKE DETECTOR

KEY PLAN

REVISIONS		
No.	Description	Date

RMT ENGINEERS, LLC
MECHANICAL AND FIRE PROTECTION ENGINEERING SERVICES
CONSTRUCTION MANAGEMENT SERVICES
P.O. BOX 6853, TAMUNING, GUAM 96931
TEL. (671) 969 - 0768
Email: admin@rmtengineers.com

I HEREBY CERTIFY THAT THIS PLAN WAS PREPARED BY ME OR UNDER MY DIRECT SUPERVISION

DATE: _____

Project:
GMH URGENT CARE HVAC IMPROVEMENTS
GUAM MEMORIAL HOSPITAL TAMUNING, GUAM

Title:
URGENT CARE A/C & VENTILATION REMOVAL PLAN & URGENT CARE A/C & VENTILATION PLAN – PHASE 1, KEYED NOTES, & NOTES

FINAL SUBMITTAL

Designed:	RMT
Drawn:	AI
Checked:	RMT
Supv:	RMT
Scale:	AS SHOWN
Date:	10/25/2024
Project No. 61K2112	AutoCAD File GMH URGENT CARE

Drawing No.
M2.3

Sheet No. 21 of 30

KEYED NOTES:

1. REMOVE (E) EAD
2. REMOVE (E) EAR

NOTES:

1. ITEMS SHOWN WITH HATCH LINES SHALL BE REMOVED.
2. ITEMS SHOWN IN HEAVY LINES ARE NEW.
3. ITEMS SHOWN IN LIGHT LINES ARE EXISTING.
4. REPLACE EXIST'G CEILING DIFFUSERS THAT WILL BE AFFECTED BY THIS WORK WITH HIGH INDUCTION DIFFUSERS.

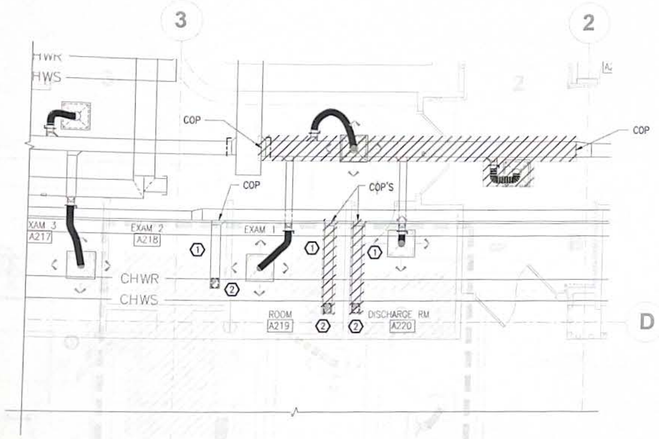

1 URGENT CARE A/C & VENTILATION REMOVAL PLAN - PHASE 2
SCALE: 1/4" = 1'-0"

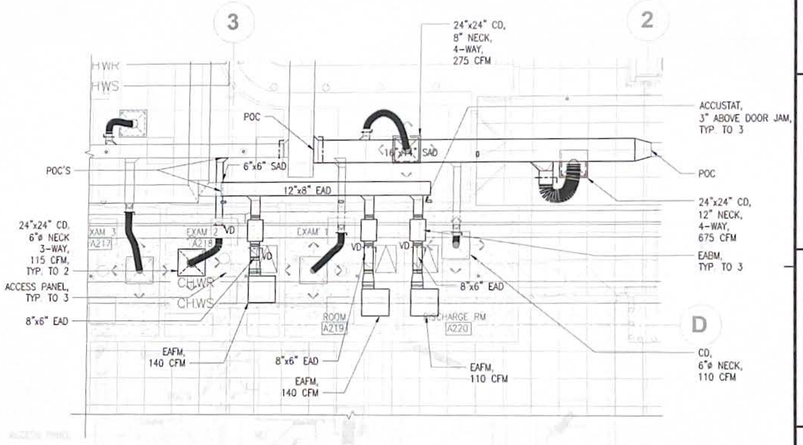

2 URGENT CARE A/C & VENTILATION PLAN - PHASE 2
SCALE: 1/4" = 1'-0"

SCALE: 0 1' 2' 4' 6' 8' ¼ = 1'-0"

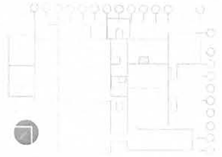

KEY PLAN

REVISIONS		
No.	Description	Date

RMT ENGINEERS, LLC
MECHANICAL AND FIRE PROTECTION ENGINEERING SERVICES
CONSTRUCTION MANAGEMENT SERVICES
P.O. BOX 6853, TAMUNING, GUAM 96931
TEL: (671) 969 - 0768
Email: admin@rmtengineers.com

I HEREBY CERTIFY THAT THIS PLAN WAS PREPARED BY ME OR UNDER MY DIRECT SUPERVISION
DATE: 10-25-24

Project:
GMH URGENT CARE HVAC IMPROVEMENTS
GUAM MEMORIAL HOSPITAL TAMUNING, GUAM

Title:
URGENT CARE A/C & VENTILATION REMOVAL PLAN & URGENT CARE A/C & VENTILATION PLAN – PHASE 2, KEYED NOTES, & NOTES

FINAL SUBMITTAL

Designed:	RMT
Drawn:	AI
Checked:	RMT
Supv:	RMT
Scale:	AS SHOWN
Date:	10/25/2024
Project No. 61K2112	AutoCAD File DWG UNDER ONE

Drawing No.
M2.4

Sheet No. 22 of 30